Washer-Extractor

Pocket Hardmount

Refer to Page 5 for Model Numbers

Parts

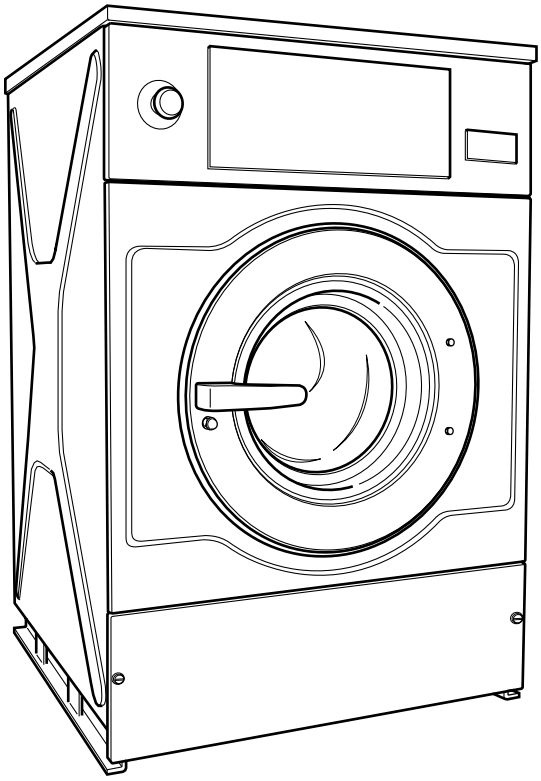

CHM2097N_D0887

Alliance Laundry Systems

www.alliancelaundry.com

Part No. D0887R9
January 2014

Table of Contents

Title	Page
Parts Ordering Information	3
Nameplate Location	3
Model Identification	5
Pocket Hardmount Washer-Extractor Product Overview	6
Frame - *55 and *235 Models Through 1/17/10	8
Frame - *55 and *235 Models Starting 1/18/10	10
Frame - *75, *90, *305 and *400 Models	12
Bearing Housing - *55 and *235 Models Through 1/30/11	14
Bearing Housing - *55 and *235 Models Starting 1/31/11	16
Bearing Housing - *75, *90, *305 and *400 Models	18
Basket, Pulley and Belt - *55 and *235	20
Basket, Pulley and Belt - *75, *90, *305 and *400 Models	22
Shell and Basket - *55 and *235 Models	24
Shell and Basket - *75, *90, *305 and *400 Models	26
Motor and Belt - *55 and *235 Models Through 1/17/10	28
Motor and Belt - *55 and *235 Models Starting 1/18/10	30
Motor and Belt - *75 and *305 Models	32
Motor and Belt - *90 and *400 Models	34
Drain Plumbing	36
Door Lock	38
Door	40
Control Panel - Cygnus Professional	42
Control Panel - Cygnus Premium OPL	44
Control Panel - Cygnus Premium Coin	46
Control Panel - Cygnus Standard/Commercial OPL	48
Control Panel - Cygnus Standard/Commercial Coin	50
Control Panel - Micro-20 OPL	52
Control Panel - Micro-20 Coin	54
Control Panel - Sigma Coin	56
Control Panel - Sigma OPL	58
Control Panel - PS40F	60
Coin Drop - Mechanical Coin Meter	62
Coin Drop - Electronic Coin Meter	64
Left Side, Lower Front and Upper Back Panels - *55 and *235 Models with Older Style Soap Dispenser Crossbar	66
Left Side, Lower Front and Upper Back Panels - *75 and *305 Models with Older Style Soap Dispenser Crossbar	68
Left Side, Lower Front and Upper Back Panels with Newer Style Soap Dispenser Crossbar	70
Right Side, Front, Lower Rear and Top Panels	72
Water Inlet Valves	74
Inverter Drive - *55 and *235 Models	76

© Copyright 2014, Alliance Laundry Systems LLC

All rights reserved. No part of the contents of this book may be reproduced or transmitted in any form or by any means without the expressed written consent of the publisher.

Inverter Drive - *75 and *305 Models 78
Inverter Drive - *90 and *400 Models 80
Main Switch and Noise Filter 82
Central Operating Panel, Network Connection and Soap Injection Printboards 84
Relay, Network Connection and Main Printboards - Cygnus Models 86
Electrical Component Mounting Plate - *55, *75, *235 and *305 Models (Drawing 1 of 2) 88
Electrical Component Mounting Plate - *55, *75, *235 and *305 Models (Drawing 2 of 2) 90
Electrical Component Mounting Plate - *90 and *400 Models 92
Supply Dispenser - *55 and *235 Models with Circular Ventilation Opening 94
Supply Dispenser - *75, *90, *305 and *400 Models with Circular Ventilation Opening 96
Supply Dispenser with Rectangular Ventilation Opening 98
Steam and Electric Heating Options - *55 and *235 Models 100
Steam and Electric Heating Options - *75, *90, *305 and *400 102
Soap Pumps 104
Parts Index 107

© Copyright, Alliance Laundry Systems LLC – DO NOT COPY or TRANSMIT

Parts Ordering Information

If literature or replacement parts are required, contact the source from whom the machine was purchased or contact Alliance Laundry Systems at (920) 748-3950 for the name and address of the nearest authorized parts distributor.

For technical assistance, call either of the numbers listed below:

(920) 748-3121 Ripon, Wisconsin

+32 56 41 20 54 Wevelgem, Belgium

Nameplate Location

When calling or writing about your product, be sure to mention model and serial numbers. Model and serial numbers are located on nameplate(s) as shown.

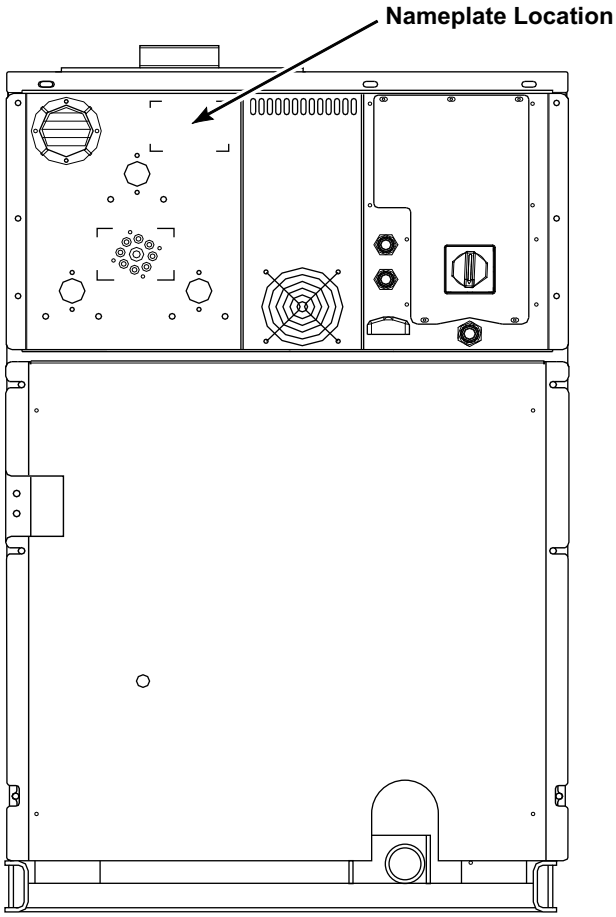

CHM3065P_D0887

© Copyright, Alliance Laundry Systems LLC – DO NOT COPY or TRANSMIT

Notes

© Copyright, Alliance Laundry Systems LLC – DO NOT COPY or TRANSMIT

Model Identification

Information in this manual is applicable to these washer-extractor models:

CWF055AN2
CWF055MN2
CWF075AN2
CWF075MN2
CWF090MN2
IWF055AN2
IWF055MC2
IWF055MD2
IWF055ME2
IWF055ML2
IWF055MN2
IWF055MX2
IWF055MY2
IWF055SC2
IWF055SD2
IWF055SE2
IWF055SL2
IWF055SR2
IWF055SX2
IWF055SY2
IWF075AN2
IWF075MC2
IWF075MD2
IWF075ME2
IWF075ML2
IWF075MN2
IWF075MX2
IWF075MY2
IWF075SC2
IWF075SD2
IWF075SE2
IWF075SL2
IWF075SR2
IWF075SX2
IWF075SY2
IWF090AN2
IWF090MC2
IWF090MD2
IWF090ME2
IWF090ML2
IWF090MN2
IWF090MX2
IWF090MY2
IWF090SC2
IWF090SD2
IWF090SE2
IWF090SL2
IWF090SR2
IWF090SX2
IWF090SY2
IWF235AN2
IWF235MC2
IWF235MD2
IWF235ME2
IWF235ML2
IWF235MN2
IWF235MX2
IWF235MY2
IWF235SC2
IWF235SD2
IWF235SE2
IWF235SL2
IWF235SR2
IWF235SX2
IWF235SY2
IWF235ZN2
IWF305AN2
IWF305MC2
IWF305MD2
IWF305ME2
IWF305ML2
IWF305MN2
IWF305MX2
IWF305MY2
IWF305SC2
IWF305SD2
IWF305SE2
IWF305SL2
IWF305SR2
IWF305SX2
IWF305SY2
IWF305ZN2
IWF400AN2
IWF400MC2
IWF400MD2
IWF400ME2
IWF400ML2
IWF400MN2
IWF400MX2
IWF400MY2
IWF400SC2
IWF400SD2
IWF400SE2
IWF400SL2
IWF400SR2
IWF400SX2
IWF400SY2
IWF400ZN2
WF235_CYGNUS-COMM_COIN
WF235_CYGNUS-COMM_OPL
WF235_CYGNUS-PREM_COIN
WF235_CYGNUS-PREM_OPL
WF235_CYGNUS-PRO
WF235_CYGNUS-STANDARD_COIN
WF235_CYGNUS-STANDARD_OPL
WF235_MICRO-20_COIN
WF235_MICRO-20_OPL
WF235_PS40F
WF235_SIGMA_COIN
WF235_SIGMA_OPL
WF305_CYGNUS-COMM_COIN
WF305_CYGNUS-COMM_OPL
WF305_CYGNUS-PREM_COIN
WF305_CYGNUS-PREM_OPL
WF305_CYGNUS-PRO
WF305_CYGNUS-STANDARD_COIN
WF305_CYGNUS-STANDARD_OPL
WF305_MICRO-20_COIN
WF305_MICRO-20_OPL
WF305_PS40F
WF305_SIGMA_COIN
WF305_SIGMA_OPL
WF400_CYGNUS-COMM_COIN
WF400_CYGNUS-COMM_OPL
WF400_CYGNUS-PREM_COIN
WF400_CYGNUS-PREM_OPL
WF400_CYGNUS-PRO
WF400_CYGNUS-STANDARD_COIN
WF400_CYGNUS-STANDARD_OPL
WF400_MICRO-20_COIN
WF400_MICRO-20_OPL
WF400_PS40F
WF400_SIGMA_COIN
WF400_SIGMA_OPL

© Copyright, Alliance Laundry Systems LLC – DO NOT COPY or TRANSMIT

Pocket Hardmount Washer-Extractor Product Overview

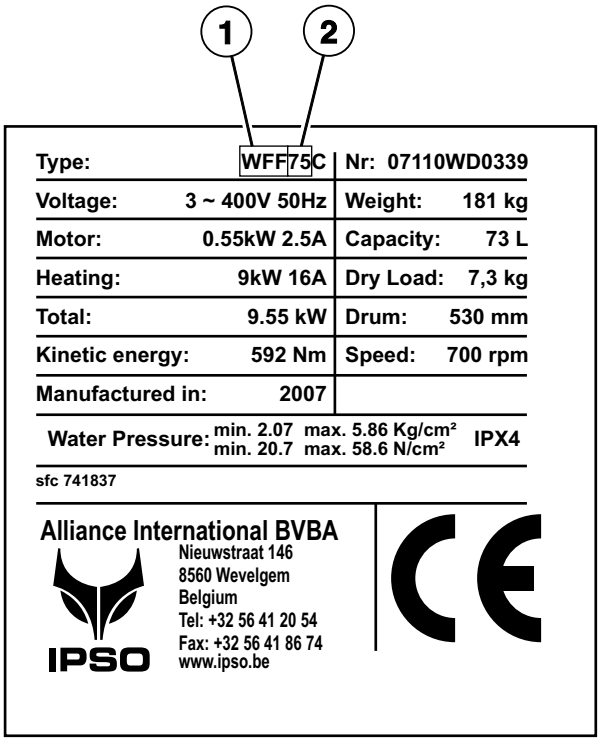

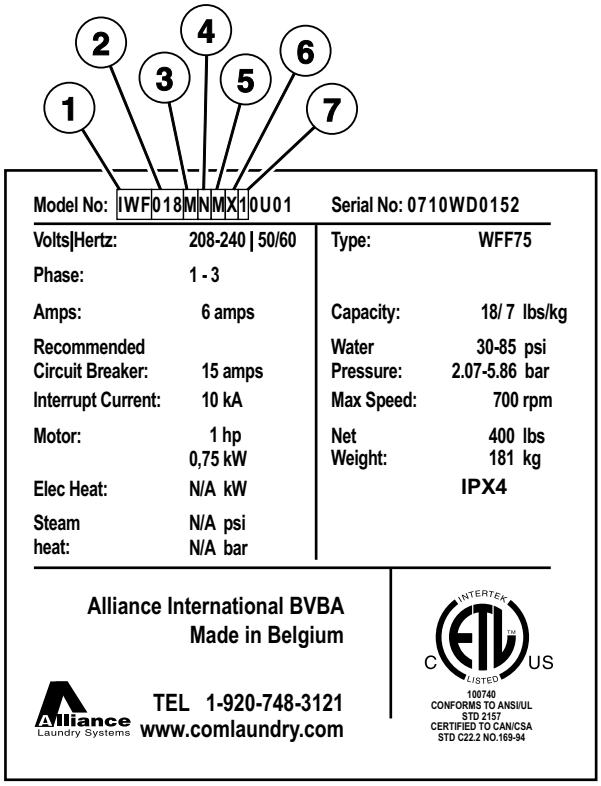

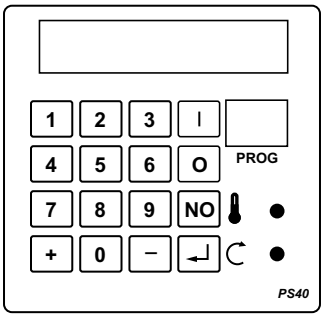

PS40

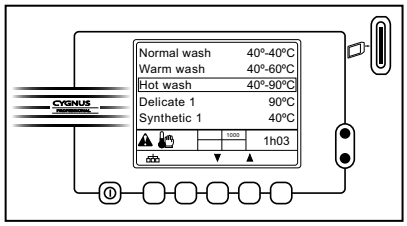

Cygnus Professional

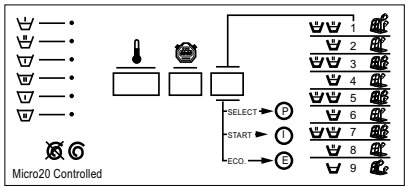

Micro 20

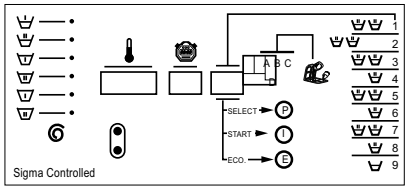

Sigma

CHM3066P_D0887

© Copyright, Alliance Laundry Systems LLC – DO NOT COPY or TRANSMIT

Pocket Hardmount Washer-Extractor Product Overview

REF	PART NO.	DESCRIPTION	COMMENTS
1	-	Product Family	CWF IWF WF
2	-	Capacity	055 075 090 235 305 400
3	-	Control	A (PS40F) Cygnus-Comm Cygnus-Prem Cygnus-Standard M (Micro-20) S (Sigma) Z (Cygnus-Pro)
4	-	Actuation	C (Coin Drop Meter) D (Dual Coin Drop) E (Electronic Drop) L (Prep for Remote or Central Pay) N (Non-Coin) R (Smart Card Ready) X (Prep for Coin) Y (Card Ready)
5	-	Speed	M (Medium Spin)
6	-	Voltage	N (440-480/50-60/3/3) P (380-415/50-60/3/3) Q (208-240/50-60/3/3) X (200-240/50-60/1/3)
7	-	Design	1

© Copyright, Alliance Laundry Systems LLC – DO NOT COPY or TRANSMIT

Frame - *55 and *235 Models Through 1/17/10

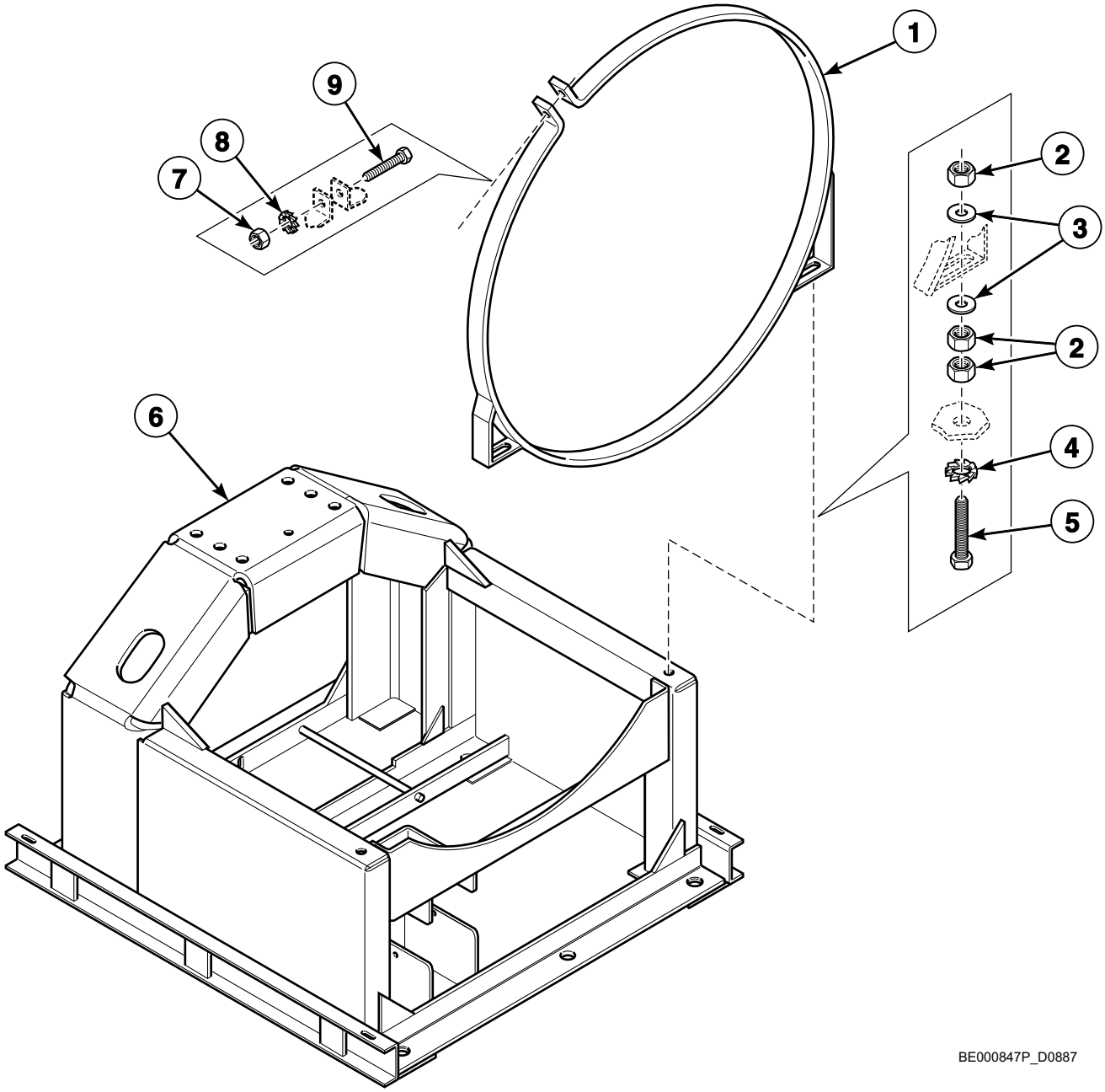

© Copyright, Alliance Laundry Systems LLC – DO NOT COPY or TRANSMIT

Frame - *55 and *235 Models Through 1/17/10

REF	PART NO.	DESCRIPTION	COMMENTS
1	212/00116/00	Tub Fastening Ring	
2	204/00002/00	Nut	
3	201/00005/00	Washer	
4	203/00001/00	Washer	
5	206/00079/00	Bolt	
6	212/00111/50	Chassis	
7	204/00004/00	Nut	
8	203/00003/00	Washer	
9	206/00007/00	Screw	

© Copyright, Alliance Laundry Systems LLC – DO NOT COPY or TRANSMIT

Frame - *55 and *235 Models Starting 1/18/10

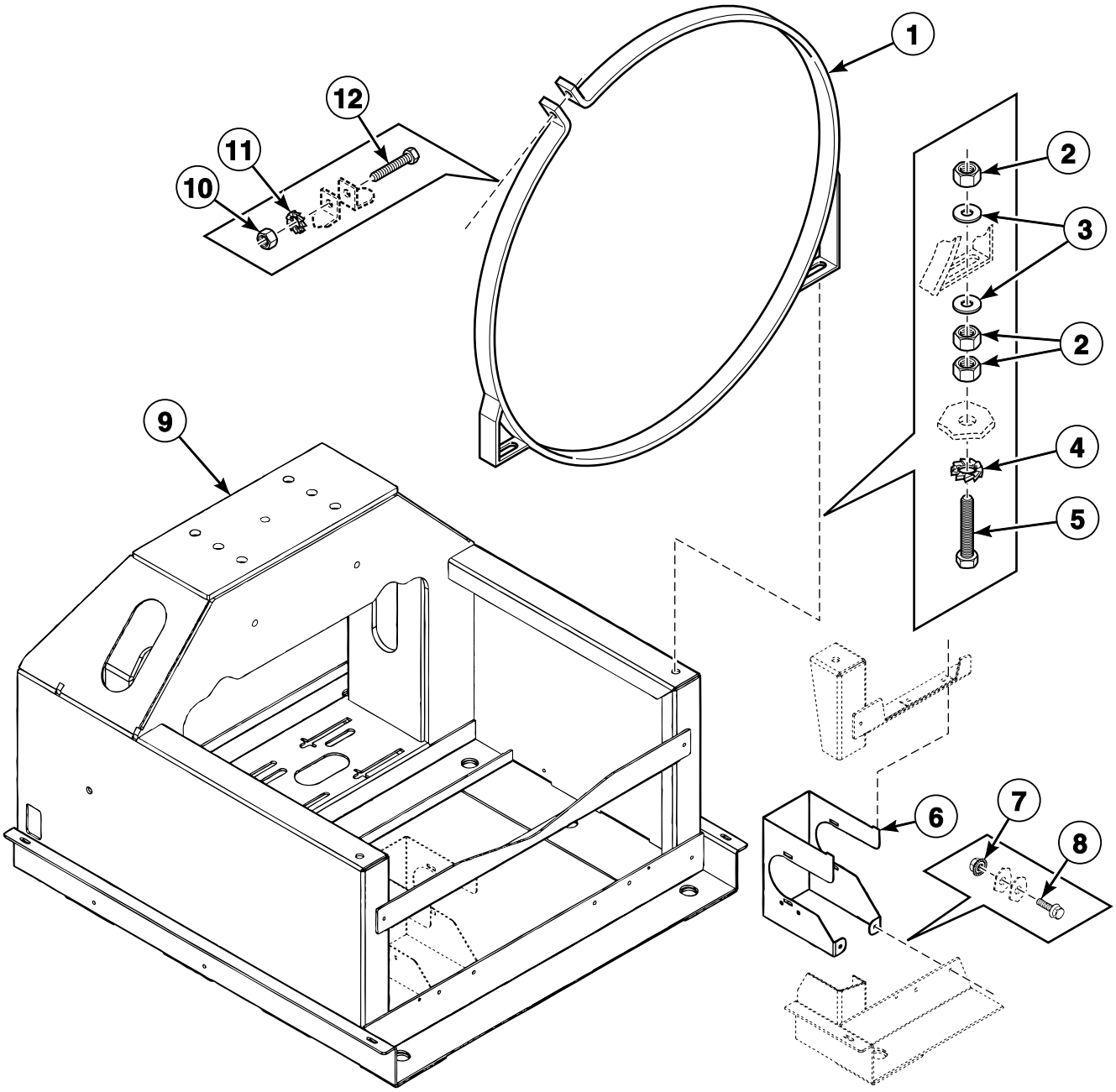

BE000847AP_D0887

© Copyright, Alliance Laundry Systems LLC – DO NOT COPY or TRANSMIT

Frame - *55 and *235 Models Starting 1/18/10

REF	PART NO.	DESCRIPTION	COMMENTS
1	212/00116/00	Tub Fastening Ring	
2	204/00002/00	Nut	
3	201/00005/00	Washer	
4	203/00001/00	Washer	
5	206/00079/00	Bolt	
6	212/00120/01	Drain Valve Support	
7	206/00101/00	Nut	
8	206/00099/00	Bolt	
9	212/00120/00	Chassis	
10	204/00004/00	Nut	
11	203/00003/00	Washer	
12	206/00007/00	Screw	

© Copyright, Alliance Laundry Systems LLC – DO NOT COPY or TRANSMIT

Frame - *75, *90, *305 and *400 Models

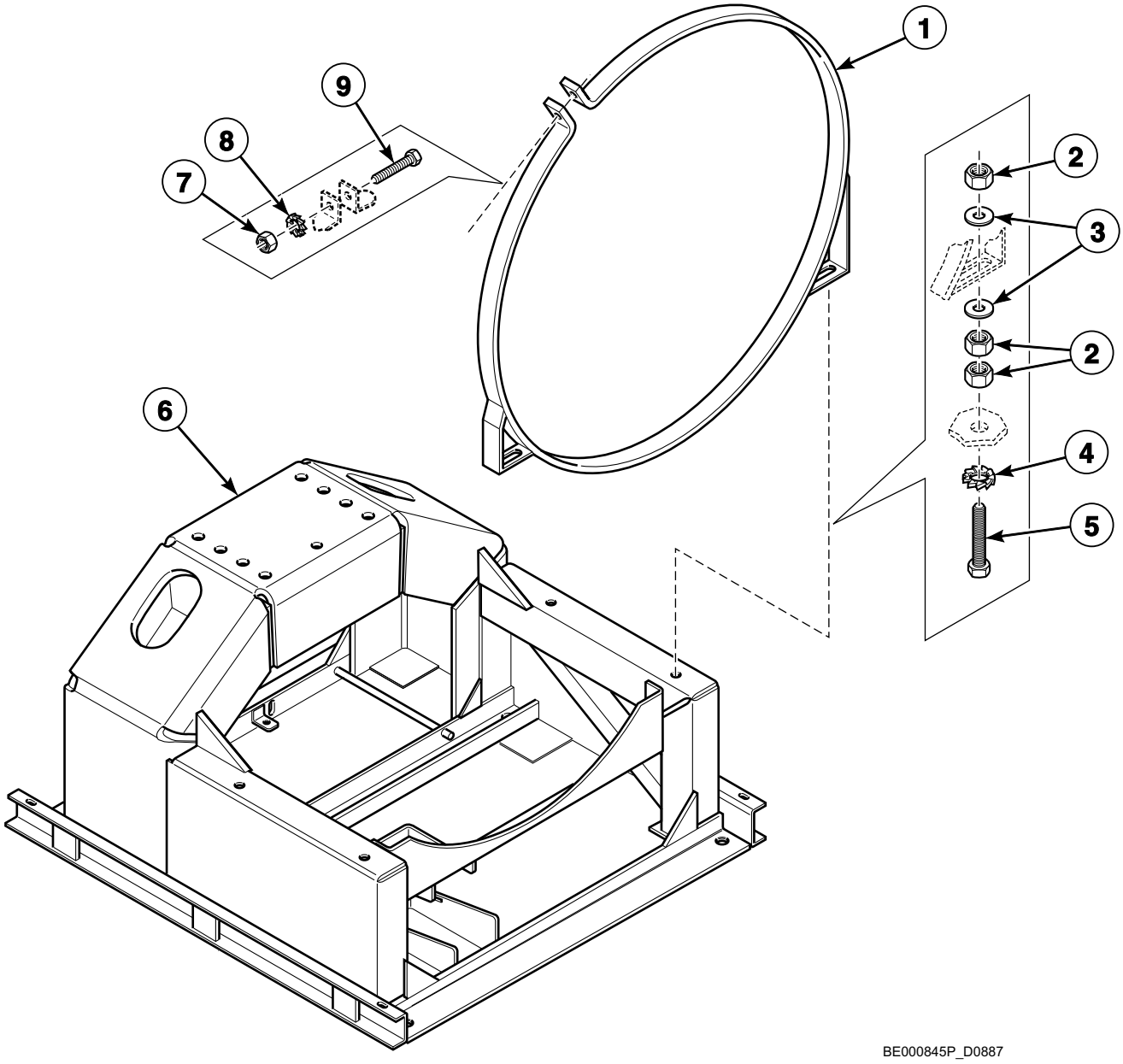

© Copyright, Alliance Laundry Systems LLC – DO NOT COPY or TRANSMIT

Frame - *75, *90, *305 and *400 Models

REF	PART NO.	DESCRIPTION	COMMENTS
1	212/00117/00	Tub Fastening Ring	
2	204/00002/00	Nut	
3	201/00005/00	Washer	
4	203/00001/00	Washer	
5	206/00079/00	Bolt	
6	212/00112/50	Chassis	*75 and *305 models
	212/00119/03	Frame	*90 and *400 models
7	204/00004/00	Nut	
8	203/00003/00	Washer	
9	206/00007/00	Screw	

© Copyright, Alliance Laundry Systems LLC – DO NOT COPY or TRANSMIT

Bearing Housing - *55 and *235 Models Through 1/30/11

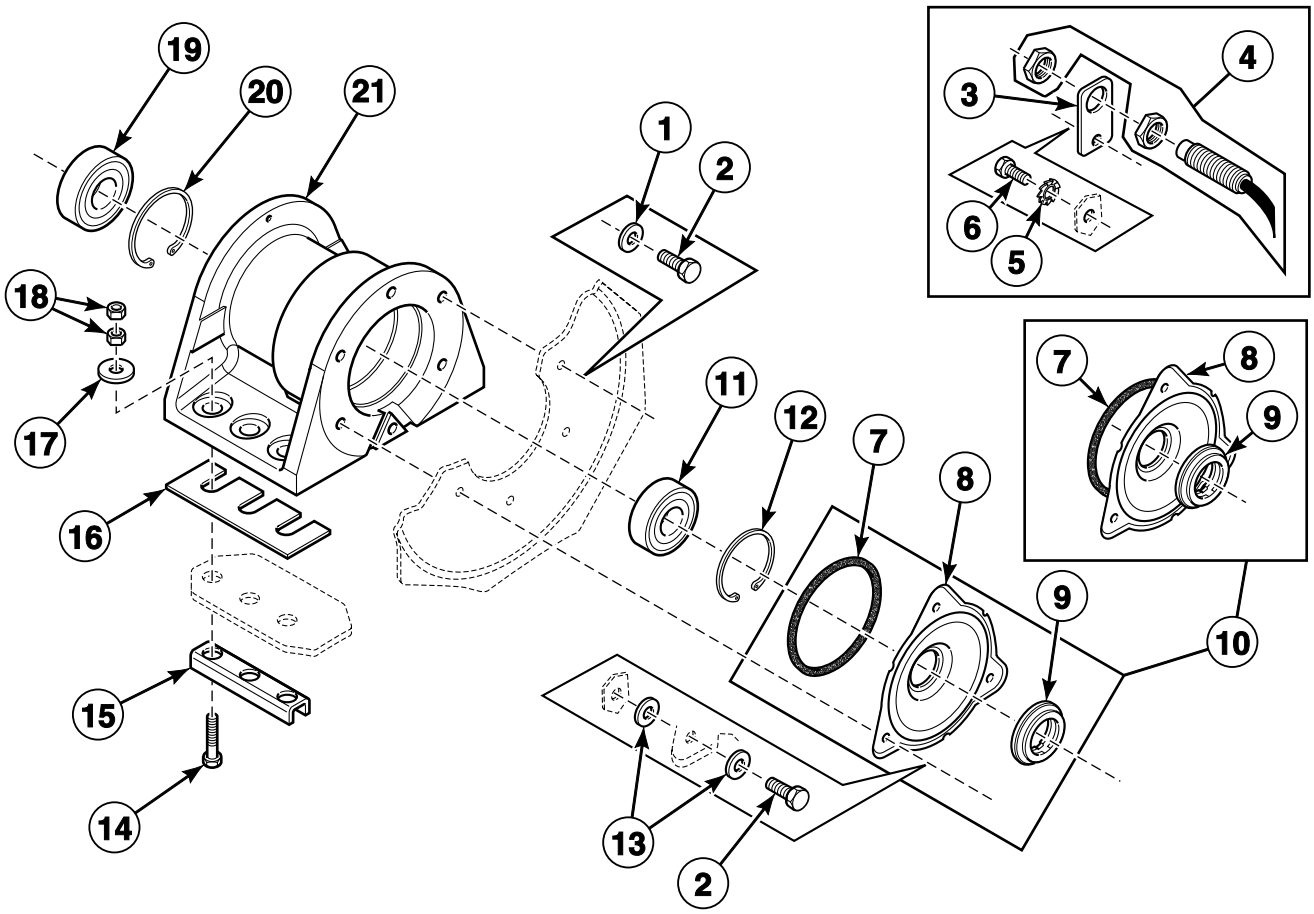

BE000827AP_D0887

© Copyright, Alliance Laundry Systems LLC – DO NOT COPY or TRANSMIT

Bearing Housing - *55 and *235 Models Through 1/30/11

REF	PART NO.	DESCRIPTION	COMMENTS
	891P3	Bearing Replacement Kit	Includes items 1, 2, 10, 11, 19, 219/00004/00 Counter Ring, 223/00242/40 Tub Front Panel Gasket and F8388601P Deflector Inlet
	382P3	Bearing Replacement Tool Kit	
1	201/00201/00	Washer	
2	205/00102/00	Bolt	
3	152/00055/00	Speed Detector Bracket	
4	210/00075/00	Speed Detector	
5	203/00004/00	Washer	
6	205/00104/00	Bolt	
7	217/00002/00	O-Ring	Models through 1/30/11; Used with B12327101 Cylinder and Shaft Assembly
8	219/00001/00	Seal Cover	Models through 1/30/11; Used with B12327101 Cylinder and Shaft Assembly
9	219/00003/00	Shaft Seal	Models through 1/30/11; Used with B12327101 Cylinder and Shaft Assembly
10	119/00001/01	Seal Holder Assembly	Models through 1/30/11; Used with B12327101 Cylinder and Shaft Assembly
	B12333701	Seal Plate Assembly	Models starting 1/31/11; Used with B12380901 Basket (3 mm) and B12381001 Basket (9 mm)
11	212/00004/00	Ball Bearing	
12	212/00006/00	Retainer Ring	
13	201/00201/00	Washer	
14	206/00093/00	Bolt	
15	113/00067/00	U-Piece Assembly	
16	113/00017/01	Bearing Housing Plate	1 mm
	113/00017/02	Bearing Housing Plate	2 mm
17	201/00001/00	Washer	
18	204/00010/00	Nut	
19	212/00024/00	Ball Bearing	
20	212/00037/00	Retainer Ring	
21	212/10104/00	Bearing Housing Assembly	Includes items 11 and 19
	212/00104/00	Bearing Housing Assembly	

© Copyright, Alliance Laundry Systems LLC – DO NOT COPY or TRANSMIT

Bearing Housing - *55 and *235 Models Starting 1/31/11

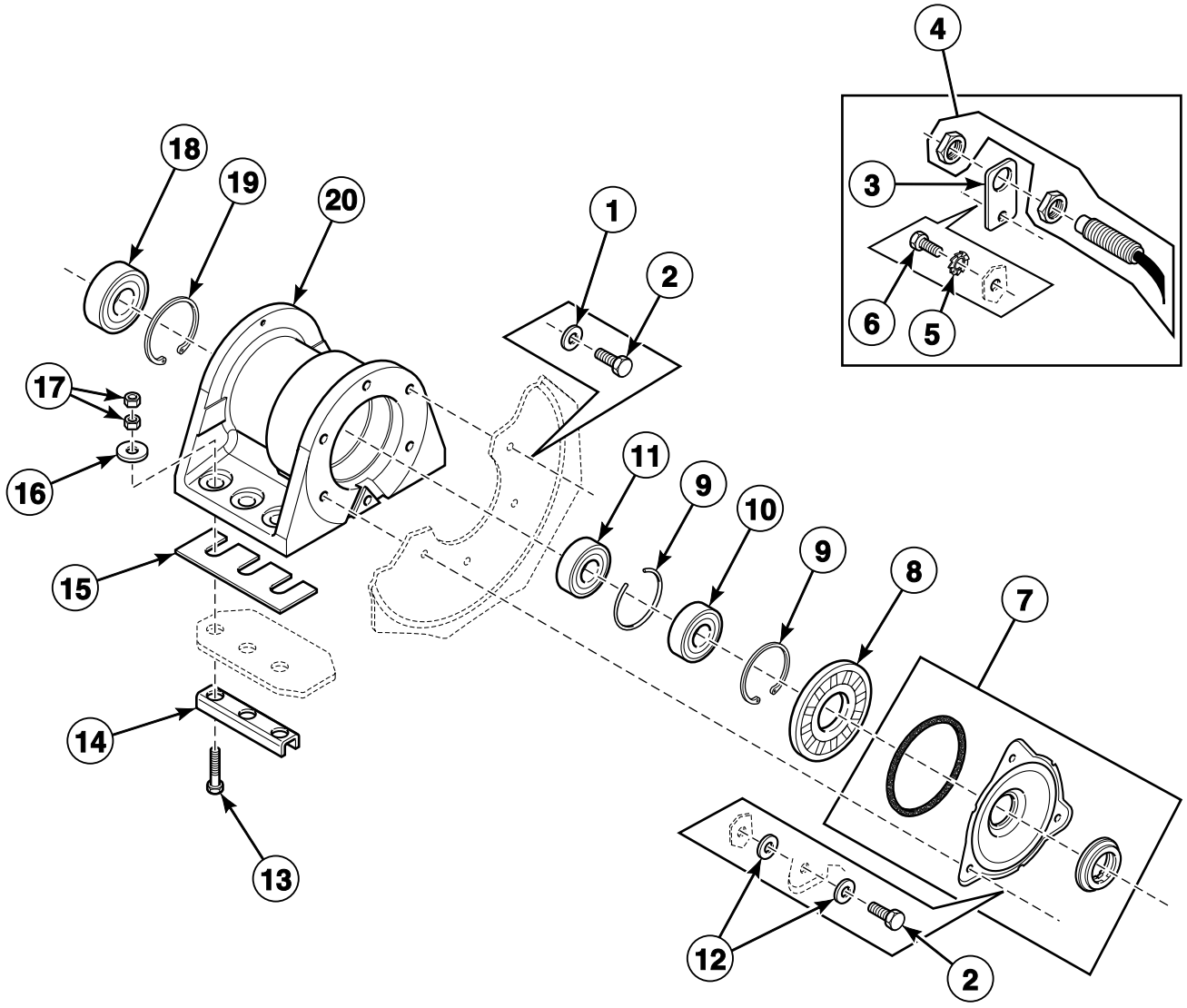

CFD545P_D0887

© Copyright, Alliance Laundry Systems LLC – DO NOT COPY or TRANSMIT

Bearing Housing - *55 and *235 Models Starting 1/31/11

REF	PART NO.	DESCRIPTION	COMMENTS
	381P3	Bearing Replacement Tool Kit	
	3884P	Bearing and Seal Kit	Includes items 1, 2, 7, 8, 10, 11, 223/00242/10 Gasket and 219/00004/00 Counter Ring
1	201/00201/00	Washer	
2	205/00102/00	Bolt	
3	152/00055/00	Speed Detector Bracket	
4	210/00075/00	Speed Detector	
5	203/00004/00	Washer	
6	205/00104/00	Bolt	
7	B12333701	Seal Plate Assembly	Used with B12380901 Basket and B12381001 Basket
8	B12332301	Lip Seal	
9	212/00006/00	Retainer Ring	
10	F100134	Bearing	
11	212/00004/00	Ball Bearing	
12	201/00201/00	Washer	
13	206/00093/00	Bolt	
14	113/00067/00	U-Piece Assembly	
15	113/00017/01	Bearing Housing Plate	1 mm
	113/00017/02	Bearing Housing Plate	2 mm
16	201/00001/00	Washer	
17	204/00010/00	Nut	
18	212/00024/01	Ball Bearing	
19	212/00037/00	Retainer Ring	
20	212/00104/01	Bearing Housing Assembly	

© Copyright, Alliance Laundry Systems LLC – DO NOT COPY or TRANSMIT

Bearing Housing - *75, *90, *305 and *400 Models

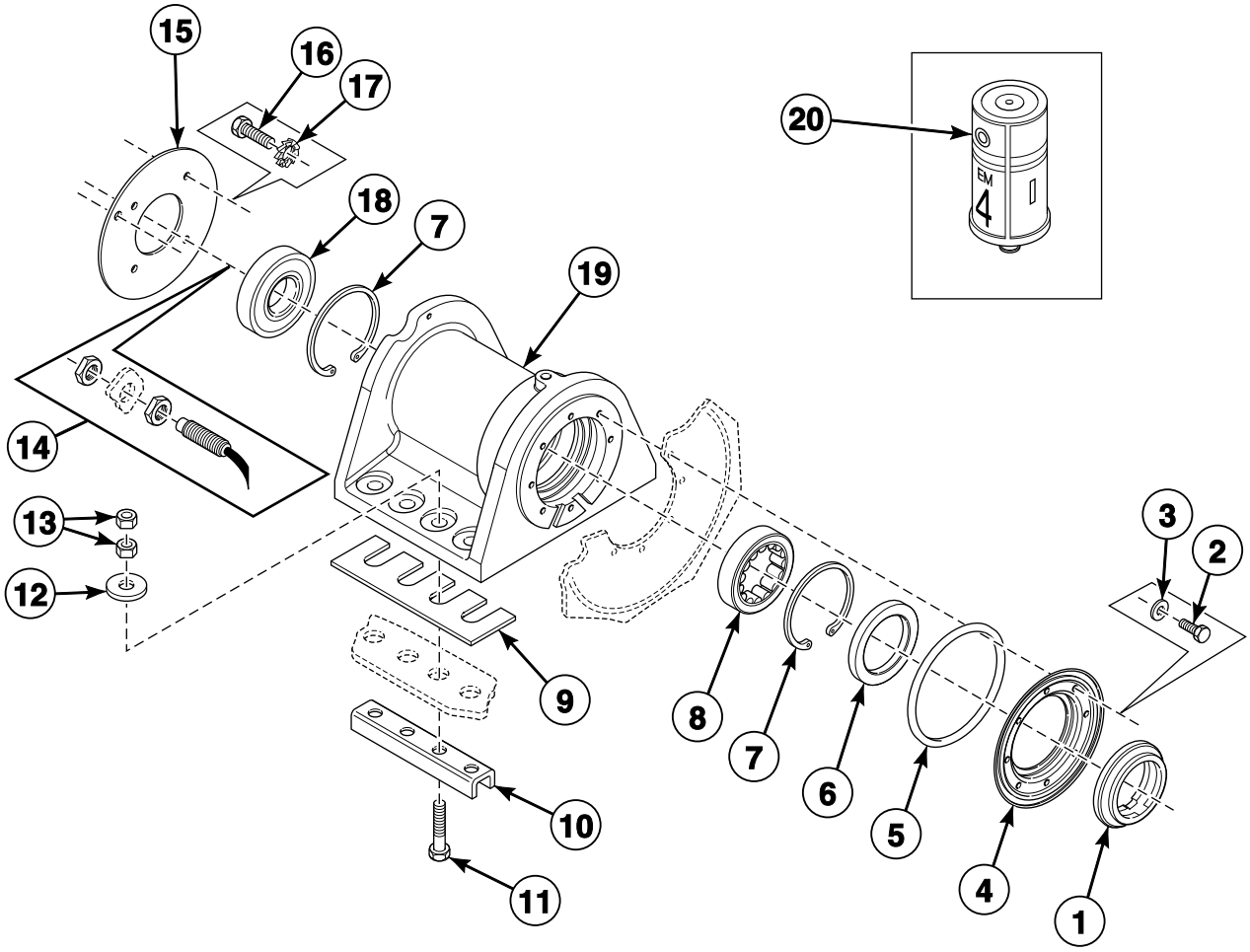

BE000846AP_D0887

© Copyright, Alliance Laundry Systems LLC – DO NOT COPY or TRANSMIT

Bearing Housing - *75, *90, *305 and *400 Models

REF	PART NO.	DESCRIPTION	COMMENTS
	892P3	Bearing Replacement Kit	
	382P3	Bearing Replacement Tool Kit	
1	231/00037/00	Shaft Seal	
2	205/00104/00	Bolt	
3	201/00202/00	Washer	
4	131/00035/00	Seal Cover Plate	
	131/00035/01	Seal Holder Assembly	Includes item 1
5	231/00036/00	O-Ring	
6	212/00007/00	Grease Ring	
7	212/00006/00	Retainer Ring	
8	212/00005/00	Roller Bearing	
9	113/00018/01	Bearing Housing Plate	1 mm
	113/00018/02	Bearing Housing Plate	2 mm
10	113/00068/00	U-Piece Assembly	
11	206/00093/00	Bolt	
12	201/00001/00	Washer	
13	204/00010/00	Nut	
14	210/00075/00	Speed Detector	
15	112/00003/00	Bearing Cover	
16	206/00010/00	Bolt	
17	203/00003/00	Washer	
18	212/00004/00	Ball Bearing	
19	212/00103/01	Bearing Housing	
	212/00103/00	Bearing Housing Assembly	Includes items 8 and 18
20	212/00002/00	Lubricator	

© Copyright, Alliance Laundry Systems LLC – DO NOT COPY or TRANSMIT

Basket, Pulley and Belt - *55 and *235

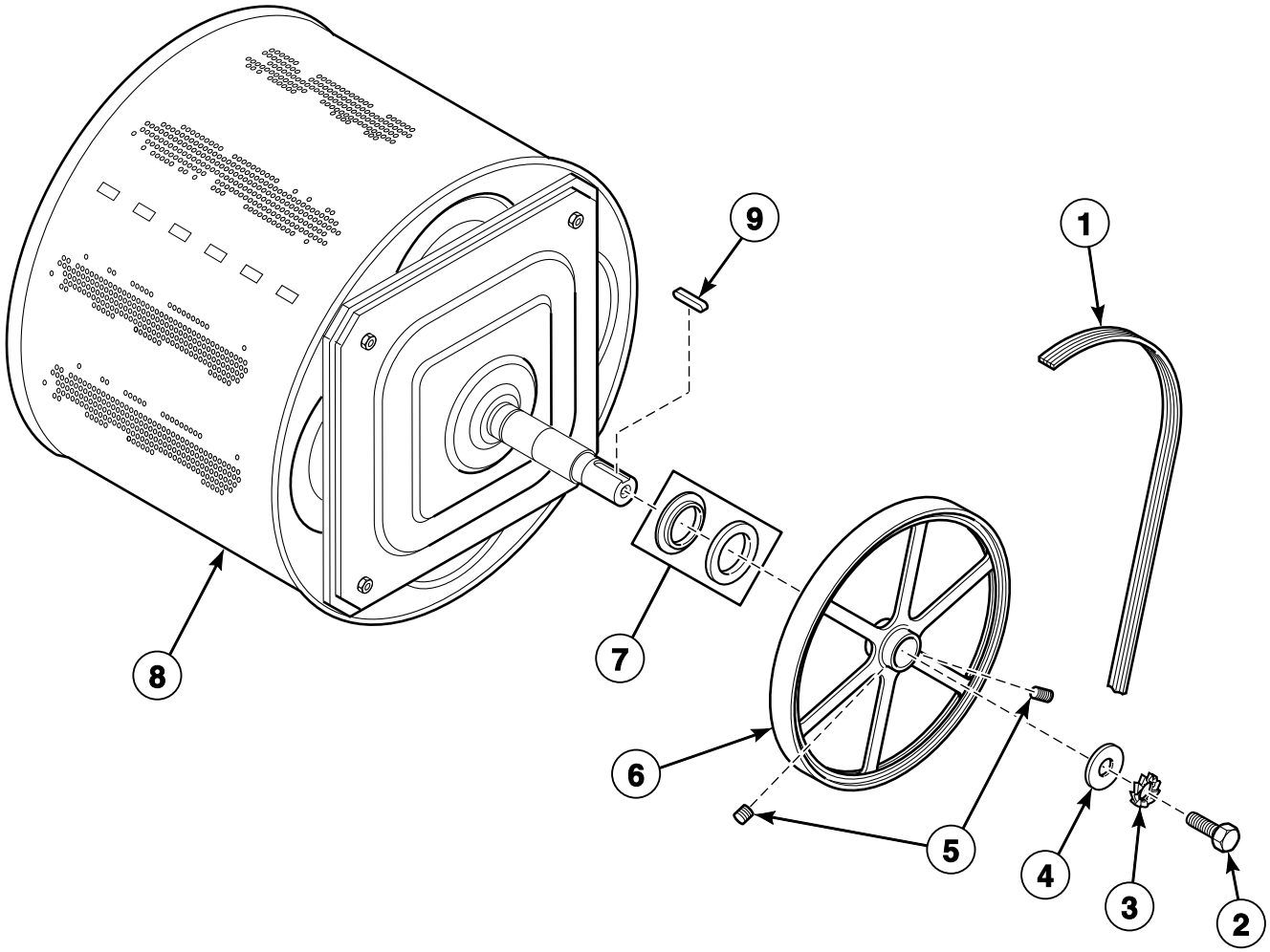

BE000848P_D0887

© Copyright, Alliance Laundry Systems LLC – DO NOT COPY or TRANSMIT

Basket, Pulley and Belt - *55 and *235

REF	PART NO.	DESCRIPTION	COMMENTS
1	226/00139/00	Belt	
2	206/00004/00	Bolt	
3	203/00001/00	Washer	
4	201/00011/00	Washer	
5	206/00056/00	Screw	
6	226/00142/00	Drum Pulley	
7	219/00004/00	Counter Ring	
8	B12543201	Basket Kit	Models through 1/30/11; Includes B12380901 Basket and 3884P Bearing and Seal Kit
	B12380901	Basket	Models starting 1/31/11; 3 mm; Used with B12333701 Seal Plate Assembly
	B12381001	Basket	Models starting 1/31/11; 9 mm; Used with B12333701 Seal Plate Assembly
9	212/00026/00	Key	

© Copyright, Alliance Laundry Systems LLC – DO NOT COPY or TRANSMIT

Basket, Pulley and Belt - *75, *90, *305 and *400 Models

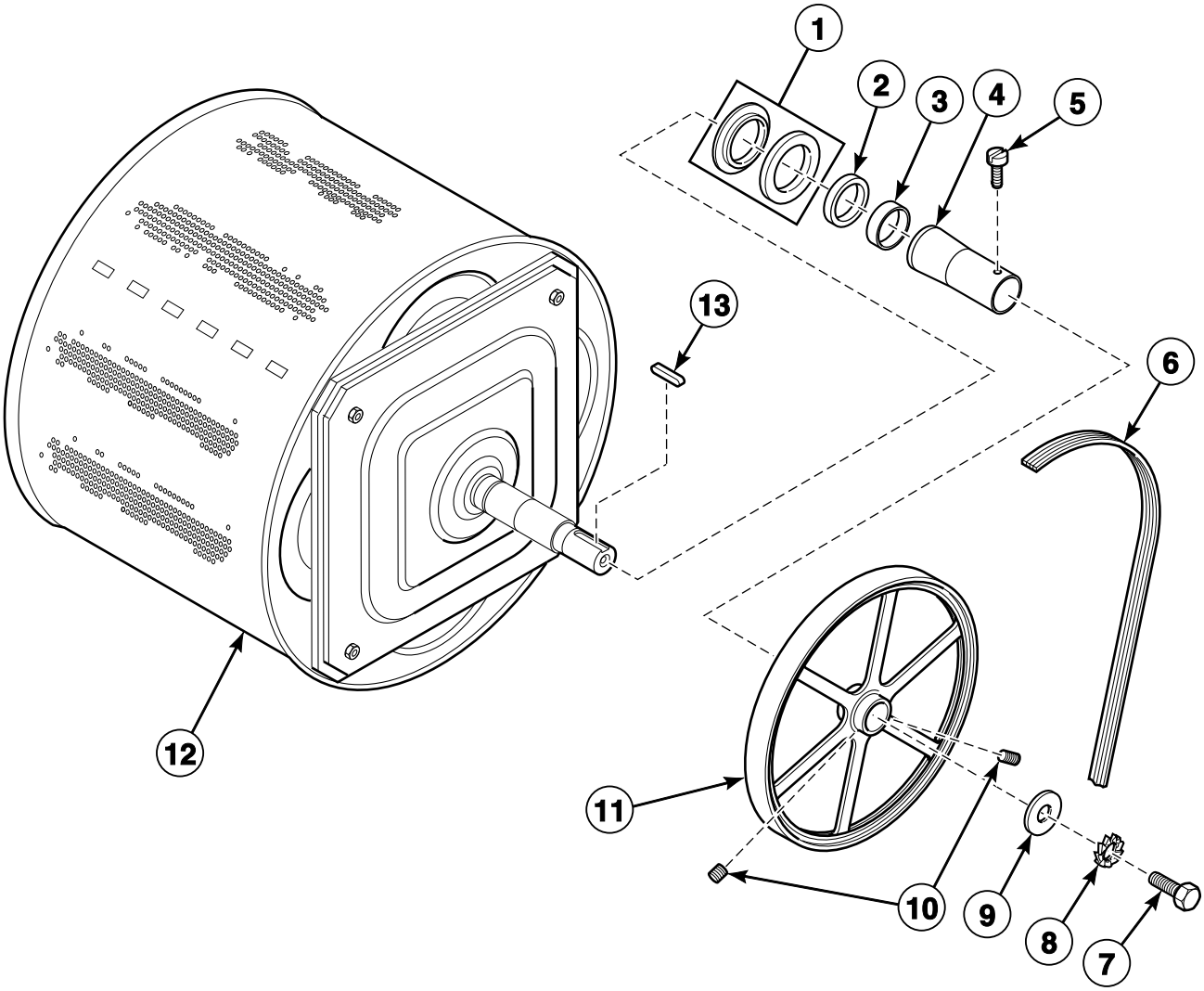

BE000850P_D0887

© Copyright, Alliance Laundry Systems LLC – DO NOT COPY or TRANSMIT

Basket, Pulley and Belt - *75, *90, *305 and *400 Models

REF	PART NO.	DESCRIPTION	COMMENTS
1	232/00008/00	Counter Ring	
2	132/00009/00	Shaft Seal	
3	212/00005/00	Roller Bearing	
4	232/00020/00	Bearing Spacer	
5	207/00004/00	Screw	
6	226/00139/00	Belt	
7	206/00004/00	Bolt	
8	203/00001/00	Washer	
9	201/00011/00	Washer	
10	206/00056/00	Screw	
11	226/00142/00	Drum Pulley	
12	B12327301	Drum	*75 and *305 models
	132/10009/00	Drum	*90 and *400 models
13	212/00026/00	Key	

© Copyright, Alliance Laundry Systems LLC – DO NOT COPY or TRANSMIT

Shell and Basket - *55 and *235 Models

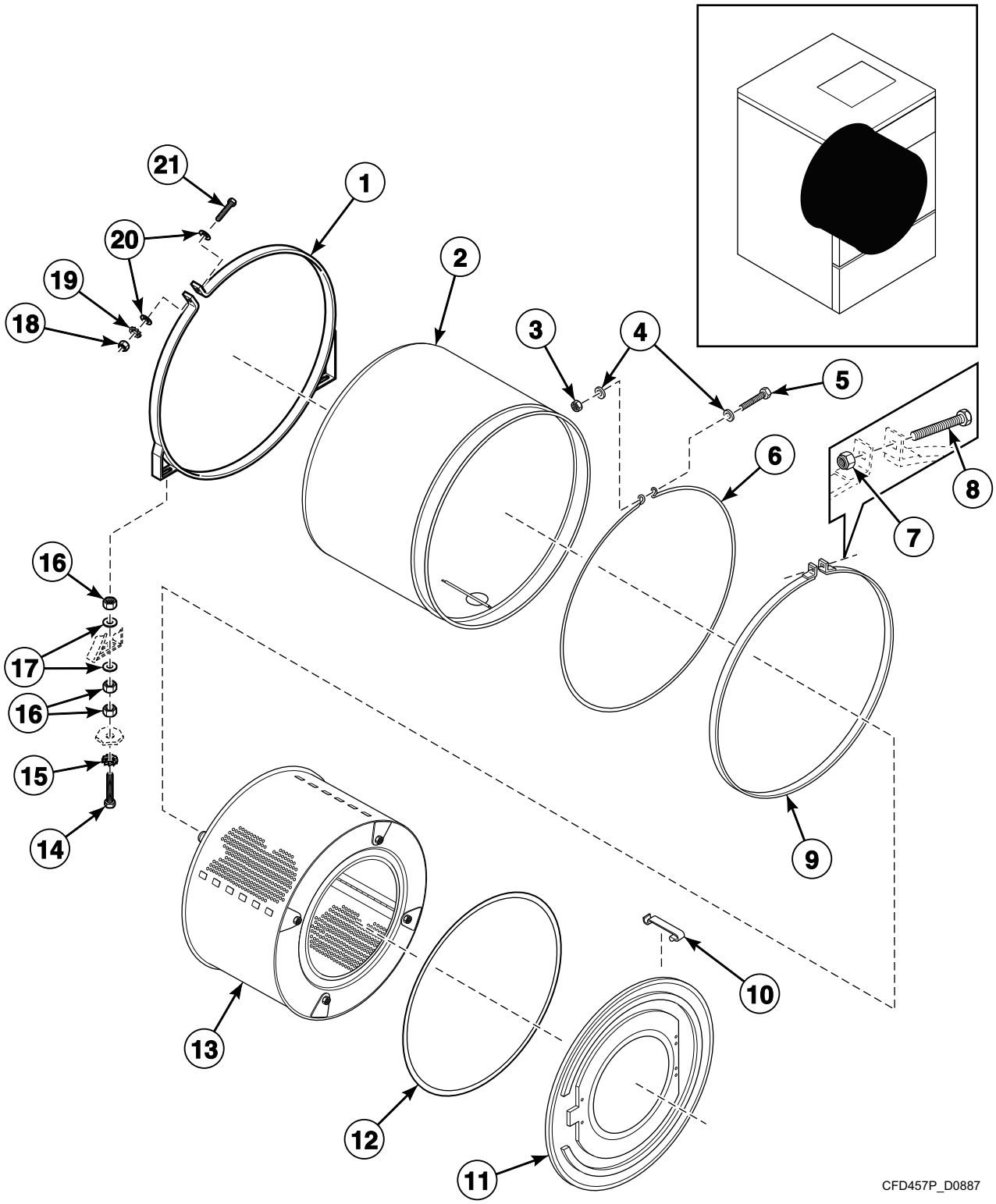

© Copyright, Alliance Laundry Systems LLC – DO NOT COPY or TRANSMIT

Shell and Basket - *55 and *235 Models

REF	PART NO.	DESCRIPTION	COMMENTS
1	212/00116/00	Tub Fastening Ring	
2	B12328901	Tub	Electric heat; Before Serial No. 10080JW0339
	B12331101	Tub	Electric heat; Starting Serial No. 10080JW0339
	B12329001	Tub	Hot water; Before Serial No. 10080JW0339
	B12331201	Tub	Hot water; Starting Serial No. 10080JW0339
	B12331301	Tub	Steam
3	204/00009/00	Nut	
4	201/00007/00	Washer	
5	206/00032/00	Bolt	
6	238/00011/00	Tub Clamp Ring	
7	204/00111/00	Nut	
8	206/00066/00	Bolt	
9	137/00008/00	Tub Mounting Strap	
10	217/00008/00	Tub Front Panel Clip	
11	138/00001/00	Tub Front	
12	B12351601	Tub Front Gasket	
13	B12543201	Basket Kit	Models through 1/30/11; Includes B12380901 Basket and 3884P Bearing and Seal Kit
	B12380901	Basket	Models starting 1/31/11; 3 mm; Used with B12333701 Seal Plate Assembly
	B12381001	Basket	Models starting 1/31/11; 9 mm; Used with B12333701 Seal Plate Assembly
14	206/00029/00	Bolt	
15	203/00001/00	Washer	
16	204/00002/00	Nut	
17	201/00009/00	Washer	
18	204/00003/00	Nut	
19	203/00002/00	Washer	
20	201/00005/00	Washer	
21	206/00052/00	Bolt	

© Copyright, Alliance Laundry Systems LLC – DO NOT COPY or TRANSMIT

Shell and Basket - *75, *90, *305 and *400 Models

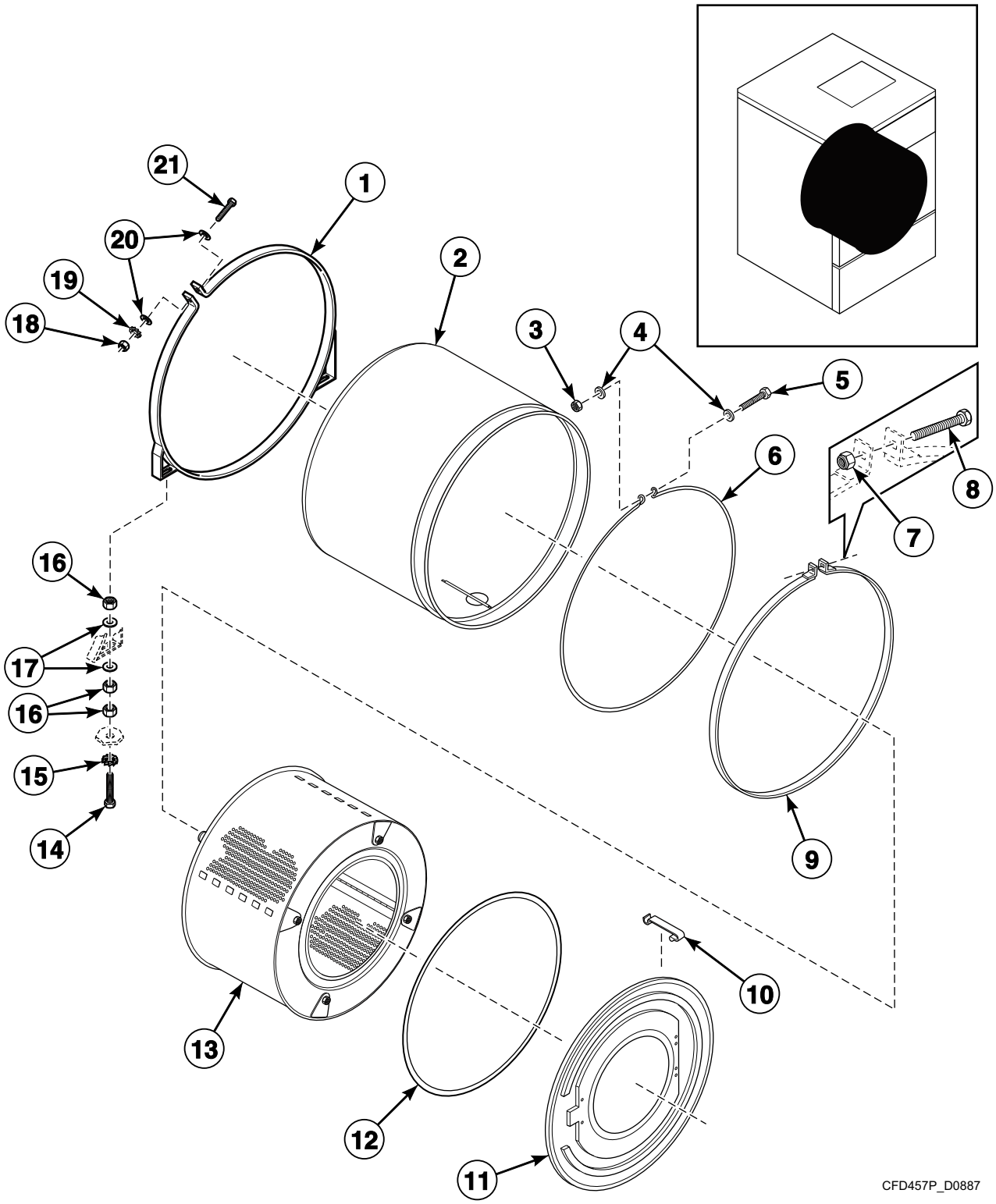

© Copyright, Alliance Laundry Systems LLC – DO NOT COPY or TRANSMIT

Shell and Basket - *75, *90, *305 and *400 Models

REF	PART NO.	DESCRIPTION	COMMENTS
1	212/00117/00	Tub Fastening Ring	
2	B12331401	Tub	*75 and *305 models; Electric heat
	B12331501	Tub	*75 and *305 models; Hot water
	B12331601	Tub	*75 and *305 models; Steam
	131/00059/00	Tub	*90 and *400 models; Electric heat
	131/00059/50	Drum	*90 and *400 models; Boiler fed
	131/00059/60	Tub	*90 and *400 models; Steam
3	204/00009/00	Nut	
4	201/00007/00	Washer	
5	206/00032/00	Bolt	
6	231/00010/00	Tub Front Ring Clamp	
7	204/00111/00	Nut	
8	206/00066/00	Bolt	
9	131/00010/00	Tub Strap	
10	217/00008/00	Tub Front Panel Clip	
11	131/00002/00	Front Panel	
12	223/00242/00	Tub Front Gasket	
13	B12327301	Drum	*75 and *305 models
	132/10009/00	Drum	*90 and *400 models
14	206/00029/00	Bolt	
15	203/00001/00	Washer	
16	204/00002/00	Nut	
17	201/00009/00	Washer	
18	204/00003/00	Nut	
19	203/00002/00	Washer	
20	201/00005/00	Washer	
21	206/00052/00	Bolt	

© Copyright, Alliance Laundry Systems LLC – DO NOT COPY or TRANSMIT

Motor and Belt - *55 and *235 Models Through 1/17/10

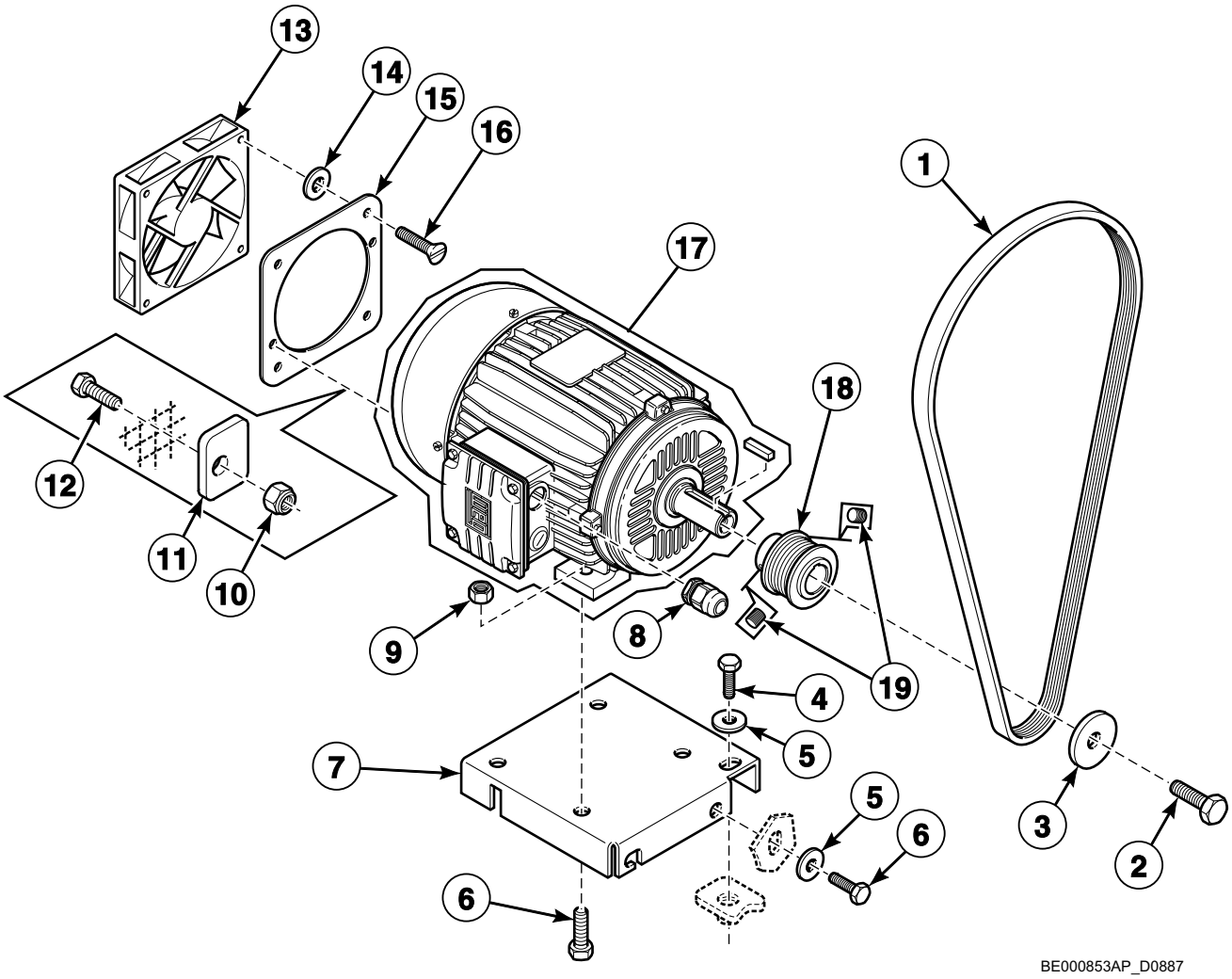

© Copyright, Alliance Laundry Systems LLC – DO NOT COPY or TRANSMIT

Motor and Belt - *55 and *235 Models Through 1/17/10

REF	PART NO.	DESCRIPTION	COMMENTS
1	226/00139/00	Belt	
2	206/00042/00	Bolt	
3	201/00004/00	Washer	
4	206/00110/00	Bolt	
5	201/00010/00	Washer	
6	206/00119/00	Bolt	
7	115/11235/00	Motor Mounting Plate	
8	211/00168/00	Cordlock	
9	204/00110/00	Nut	
10	204/00115/00	Nut	
11	117/00042/00	Retaining Ring	
12	206/00054/00	Bolt	
13	209/00287/00	Cooling Fan	
14	217/00021/00	O-Ring	
15	111/00243/00	Intermediate Fan Motor Plate	
16	207/00002/00	Screw	
17	B12510601	Motor	Order replacement motor pulley when replacing motor
18	226/00145/00	Motor Pulley	
19	206/00049/00	Screw	

© Copyright, Alliance Laundry Systems LLC – DO NOT COPY or TRANSMIT

Motor and Belt - *55 and *235 Models Starting 1/18/10

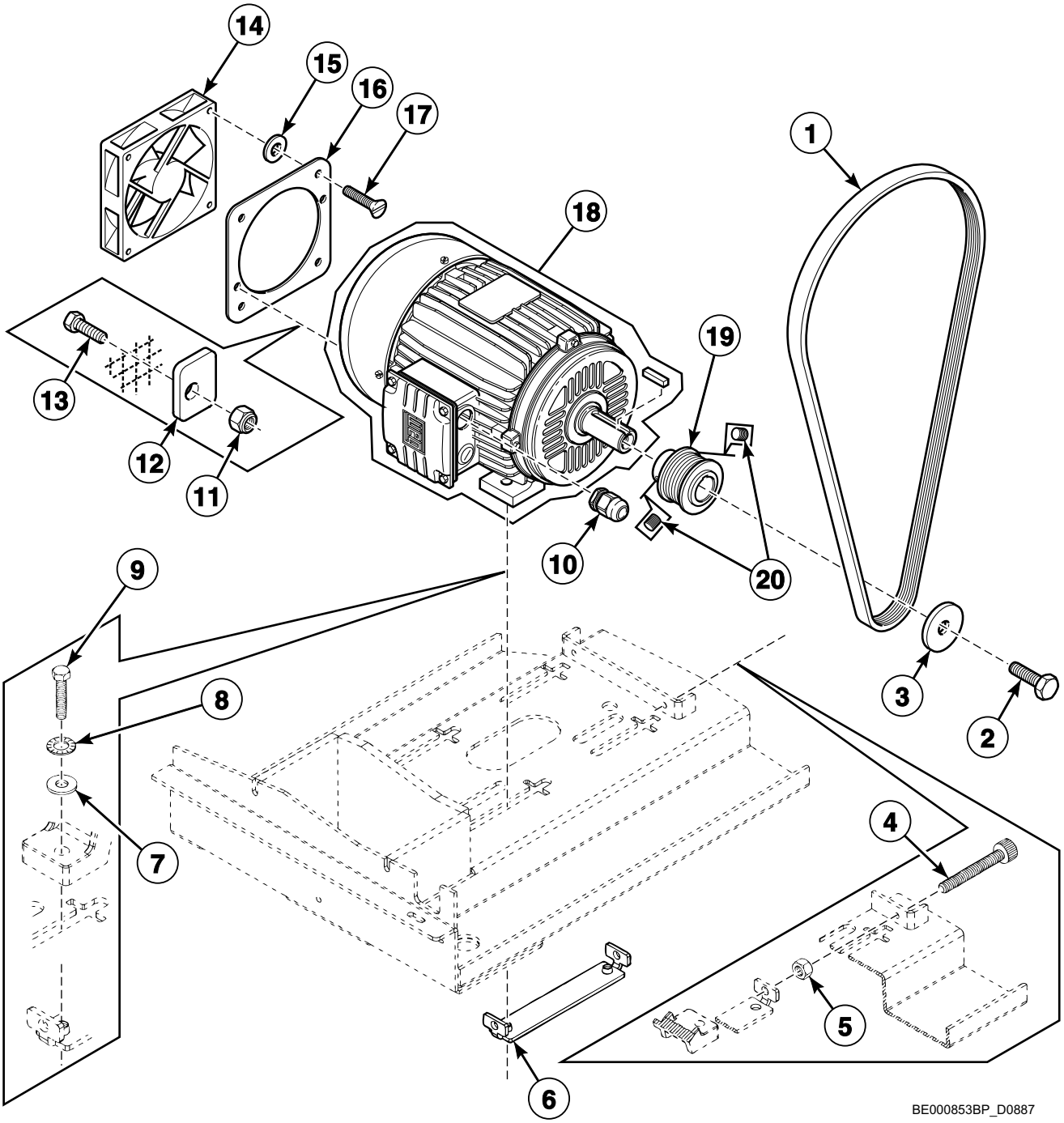

© Copyright, Alliance Laundry Systems LLC – DO NOT COPY or TRANSMIT

Motor and Belt - *55 and *235 Models Starting 1/18/10

REF	PART NO.	DESCRIPTION	COMMENTS
1	226/00139/00	Belt	
2	206/00042/00	Bolt	
3	201/00004/00	Washer	
4	208/00134/00	Bolt	
5	204/00004/00	Nut	
6	212/00121/01	Motor Clamp	
7	202/00002/00	Washer	
8	201/00028/00	Washer	
9	206/00009/00	Bolt	
10	211/00168/00	Cordlock	
11	204/00115/00	Nut	
12	117/00042/00	Retaining Ring	
13	206/00054/00	Bolt	
14	209/00287/00	Cooling Fan	
15	217/00021/00	O-Ring	
16	111/00243/00	Intermediate Fan Motor Plate	
17	207/00002/00	Screw	
18	B12510601	Motor	Order replacement motor pulley when replacing motor
19	226/00145/00	Motor Pulley	
20	206/00049/00	Screw	

© Copyright, Alliance Laundry Systems LLC – DO NOT COPY or TRANSMIT

Motor and Belt - *75 and *305 Models

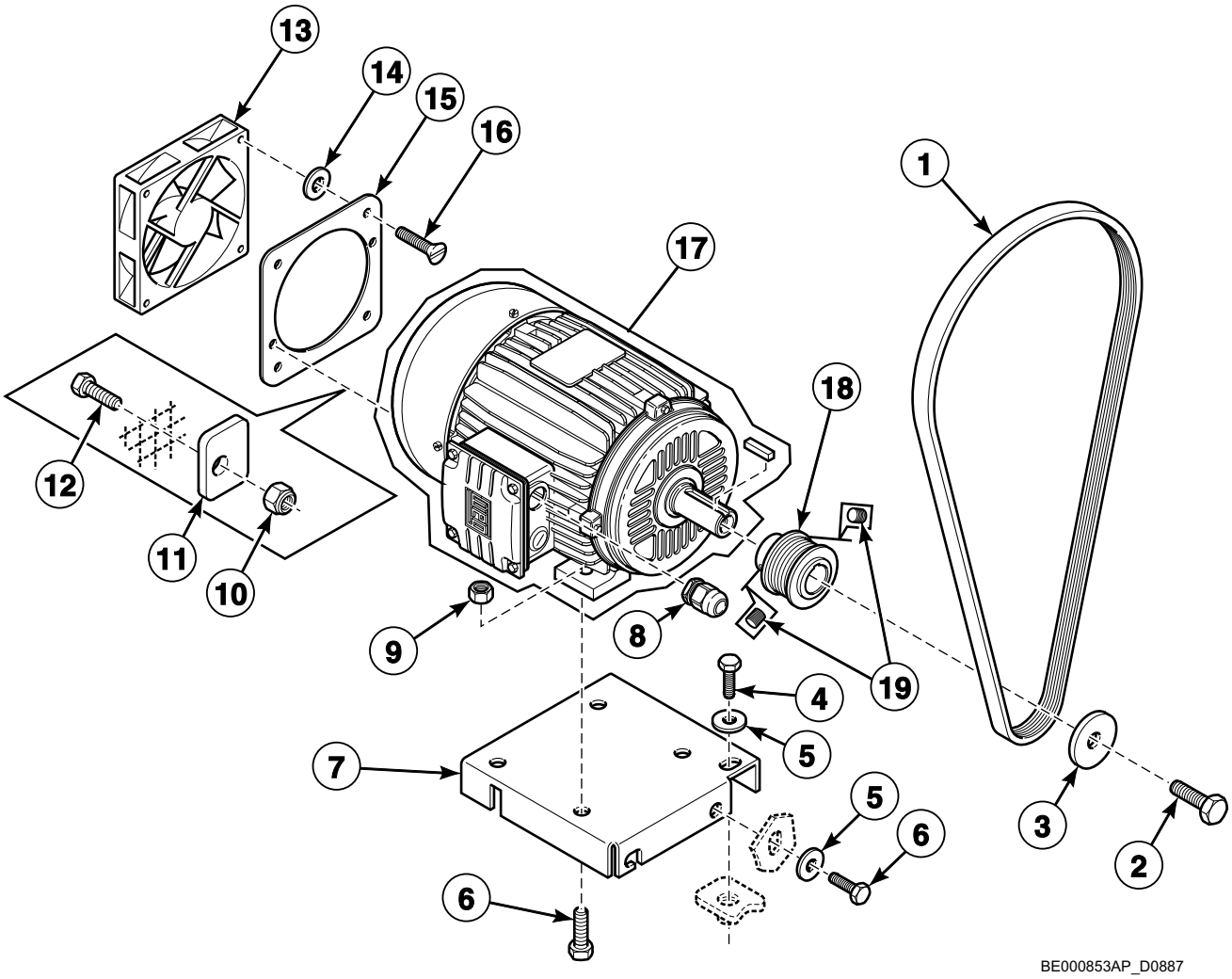

© Copyright, Alliance Laundry Systems LLC – DO NOT COPY or TRANSMIT

Motor and Belt - *75 and *305 Models

REF	PART NO.	DESCRIPTION	COMMENTS
1	226/00134/00	Belt	
2	206/00005/00	Bolt	
3	201/00004/00	Washer	
4	206/00110/00	Bolt	
5	201/00010/00	Washer	
6	206/00119/00	Bolt	
7	115/11305/00	Motor Plate	
8	211/00168/00	Cordlock	
9	204/00110/00	Nut	
10	204/00115/00	Nut	
11	117/00042/00	Retaining Ring	
12	206/00054/00	Bolt	
13	209/00287/00	Cooling Fan	
14	217/00021/00	O-Ring	
15	111/00243/00	Intermediate Fan Motor Plate	
16	207/00002/00	Screw	
17	B12510701	Motor	Order replacement motor pulley when replacing motor
18	226/00146/00	Pulley	
19	206/00049/00	Screw	

© Copyright, Alliance Laundry Systems LLC – DO NOT COPY or TRANSMIT

Motor and Belt - *90 and *400 Models

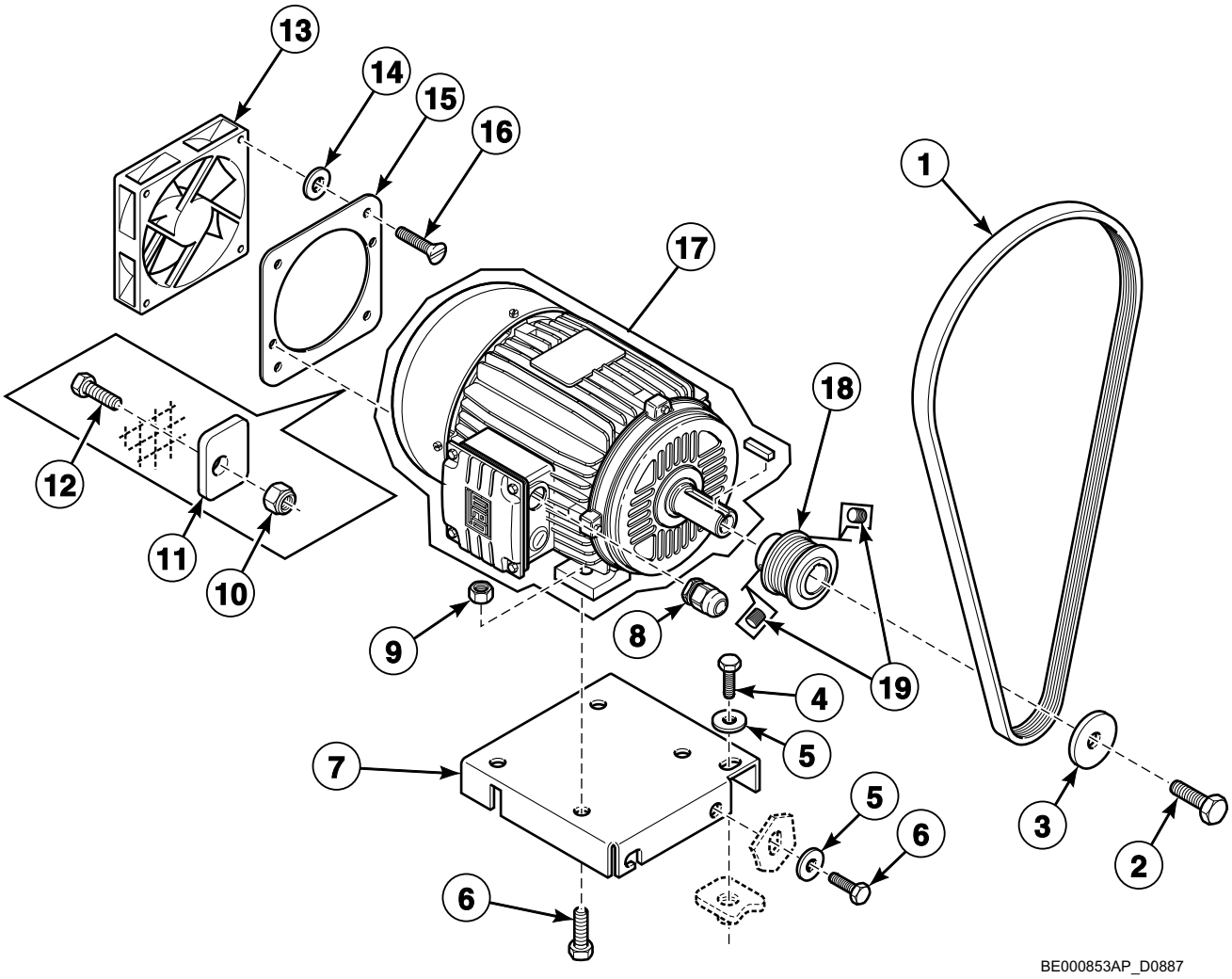

© Copyright, Alliance Laundry Systems LLC – DO NOT COPY or TRANSMIT

Motor and Belt - *90 and *400 Models

REF	PART NO.	DESCRIPTION	COMMENTS
1	226/00134/00	Belt	
2	206/00005/00	Bolt	
3	201/00004/00	Washer	
4	206/00110/00	Bolt	
5	201/00010/00	Washer	
6	206/00119/00	Bolt	
7	115/11305/00	Motor Plate	
8	211/00168/00	Cordlock	
9	204/00110/00	Nut	
10	204/00115/00	Nut	
11	117/00042/00	Retaining Ring	
12	206/00054/00	Bolt	
13	209/00287/00	Cooling Fan	
14	217/00021/00	O-Ring	
15	111/00243/00	Intermediate Fan Motor Plate	
16	207/00002/00	Screw	
17	B12510901	Motor	Order replacement motor pulley when replacing motor
18	226/00146/00	Pulley	
19	206/00049/00	Screw	

© Copyright, Alliance Laundry Systems LLC – DO NOT COPY or TRANSMIT

Drain Plumbing

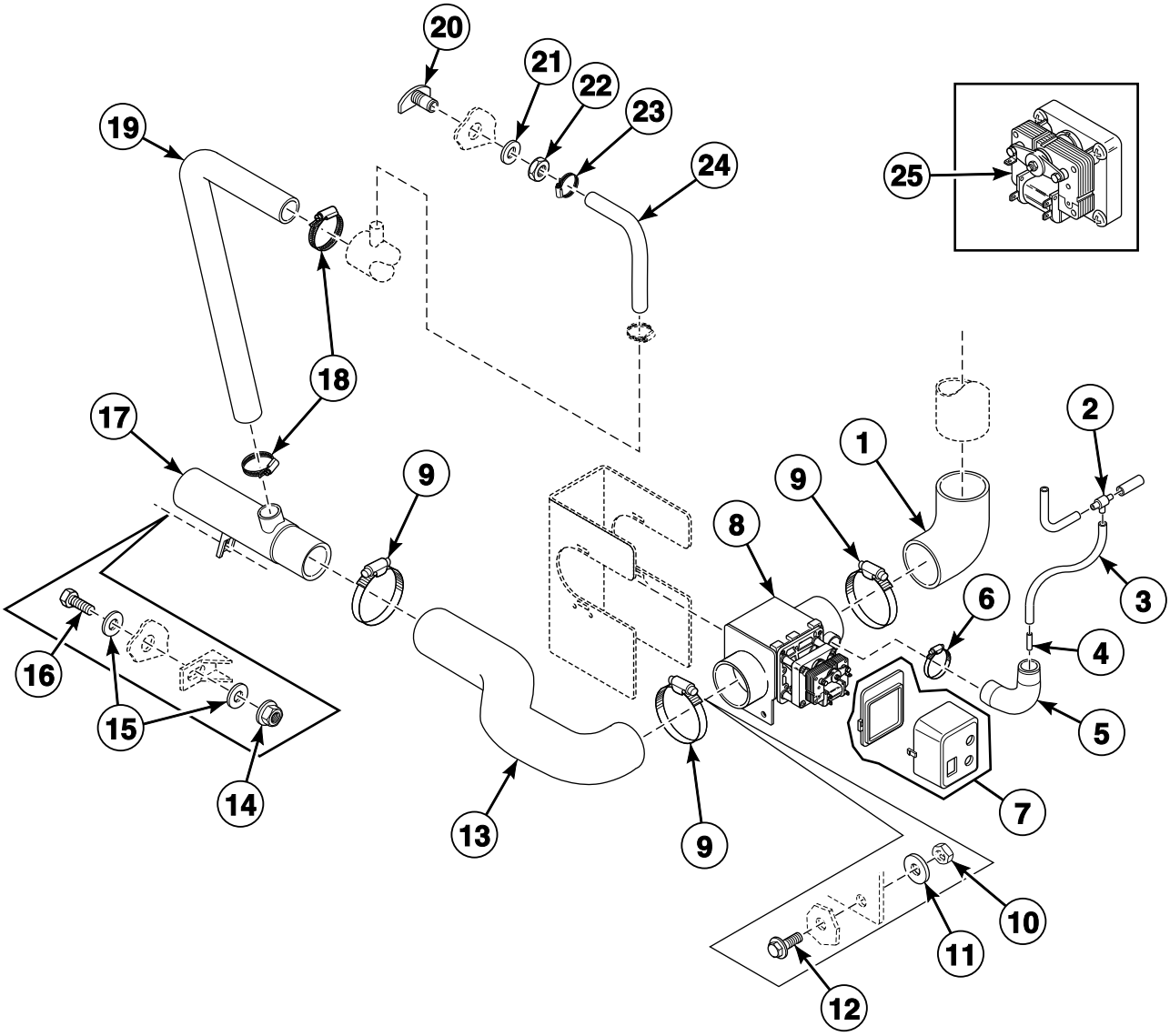

CFD327P_D0887

© Copyright, Alliance Laundry Systems LLC – DO NOT COPY or TRANSMIT

Drain Plumbing

REF	PART NO.	DESCRIPTION	COMMENTS
1	223/00327/00	Tub to Drain Valve Hose	
2	223/00173/10	Pressure Switch Hose Tee	
3	223/00333/00	Pressure Hose	
4	223/00016/00	Hose Barb	
5	223/00210/00	Pressure Switch Elbow	
6	223/00011/00	Hose Clamp	
7	209/00643/01	Drain Valve Coil Cover	
8	209/00644/00	Drain Valve	
9	223/00071/00	Hose Clamp	
10	204/00009/00	Nut	*55 and *235 models starting 1/18/10
11	202/00002/00	Washer	*55 and *235 models starting 1/18/10
12	206/00099/00	Bolt	*55 and *235 models starting 1/18/10
13	223/00328/00	Drain Valve to Drain Tube Hose	*55, *75, *235 and *305 models
	223/00387/00	Drain Hose	*90 and *400 models
14	206/00101/00	Nut	
15	201/00007/00	Washer	
16	206/00033/00	Bolt	
17	223/00106/00	Drain Pipe	
18	223/00013/00	Hose Clamp	
19	223/00131/00	Overflow Hose	
20	223/00001/04	Prewash and Mainwash Nozzle	
21	201/00002/00	Washer	
22	204/00201/00	Nut	
23	223/00010/00	Hose Clamp	
24	223/00044/00	Water Hose	
25	209/00644/11	Motor	

© Copyright, Alliance Laundry Systems LLC – DO NOT COPY or TRANSMIT

Door Lock

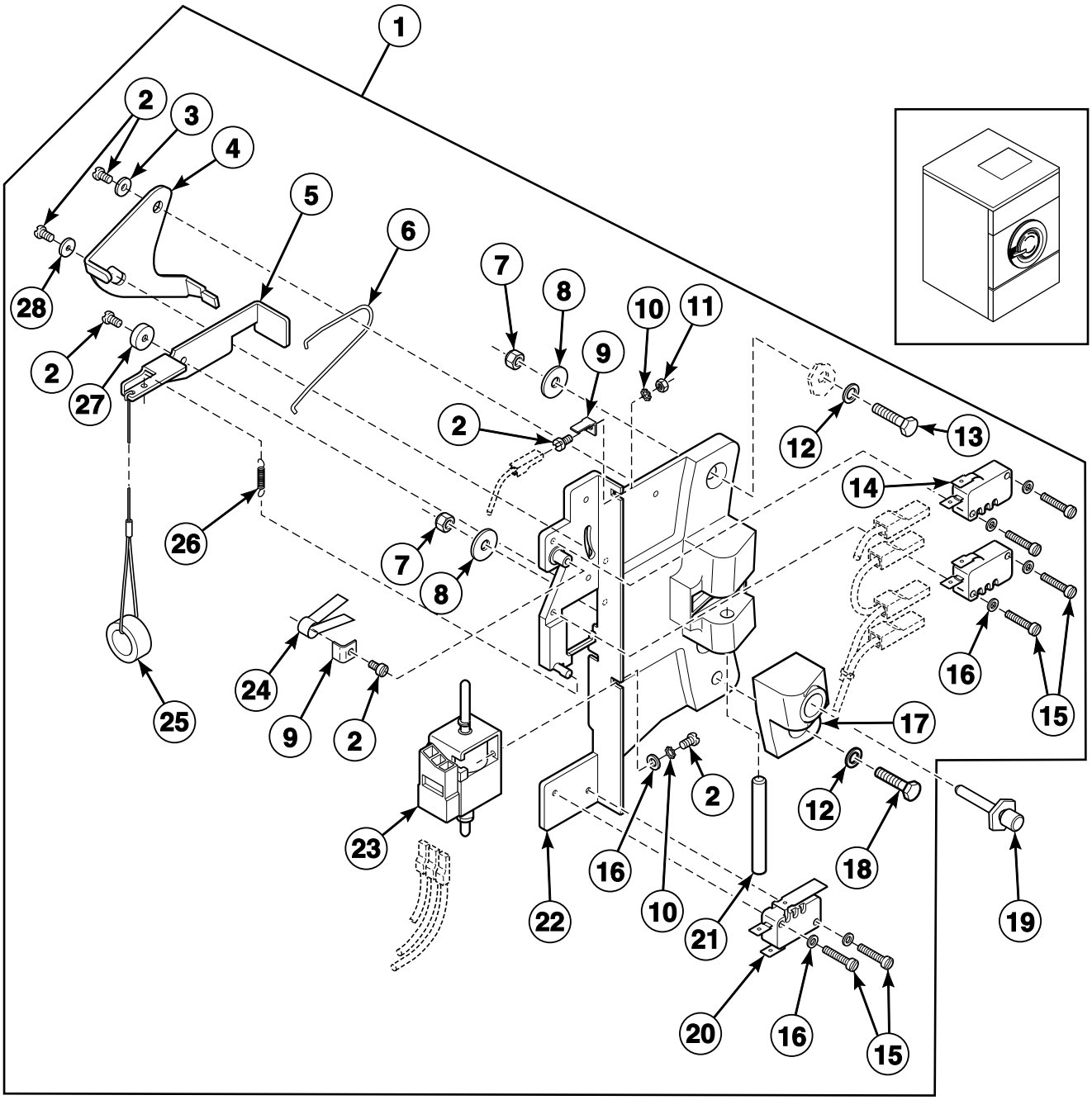

CFD543P_D0887

© Copyright, Alliance Laundry Systems LLC – DO NOT COPY or TRANSMIT

Door Lock

REF	PART NO.	DESCRIPTION	COMMENTS
1	217/00052/00A	Door Lock Assembly	
2	207/00135/00	Screw	
3	201/00017/00	Washer	
4	217/00052/05	Switch Lever	
5	217/00052/04	Interlock Lever	
6	224/00040/00	Lever Spring	
7	204/00009/00	Nut	
8	201/00006/00	Washer	
9	210/10015/00	Ground Terminal	
10	203/00007/00	Washer	
11	204/00008/00	Nut	
12	202/00101/00	Washer	
13	205/00103/00	Bolt	
14	209/00272/00	Door Lock Microswitch	
15	207/00009/00	Screw	
16	201/00018/00	Washer	
17	217/00052/11	Door Lock Bracket	
18	205/00115/00	Bolt	
19	211/00109/02	Door Lock Pin Kit	
20	209/00273/00	Light Microswitch	
21	217/00017/03	Lock Shaft	
22	217/00052/01A	Door Lock Assembly	
23	B12495102	Door Solenoid Assembly	
24	224/00049/00	Door Lock Spring	
25	217/00052/07	Door Release Wire	
26	224/00043/00	Interlock Coil Spring	
27	217/00052/03	Door Lock Spacer	
28	202/00124/00	Washer	

© Copyright, Alliance Laundry Systems LLC – DO NOT COPY or TRANSMIT

Door

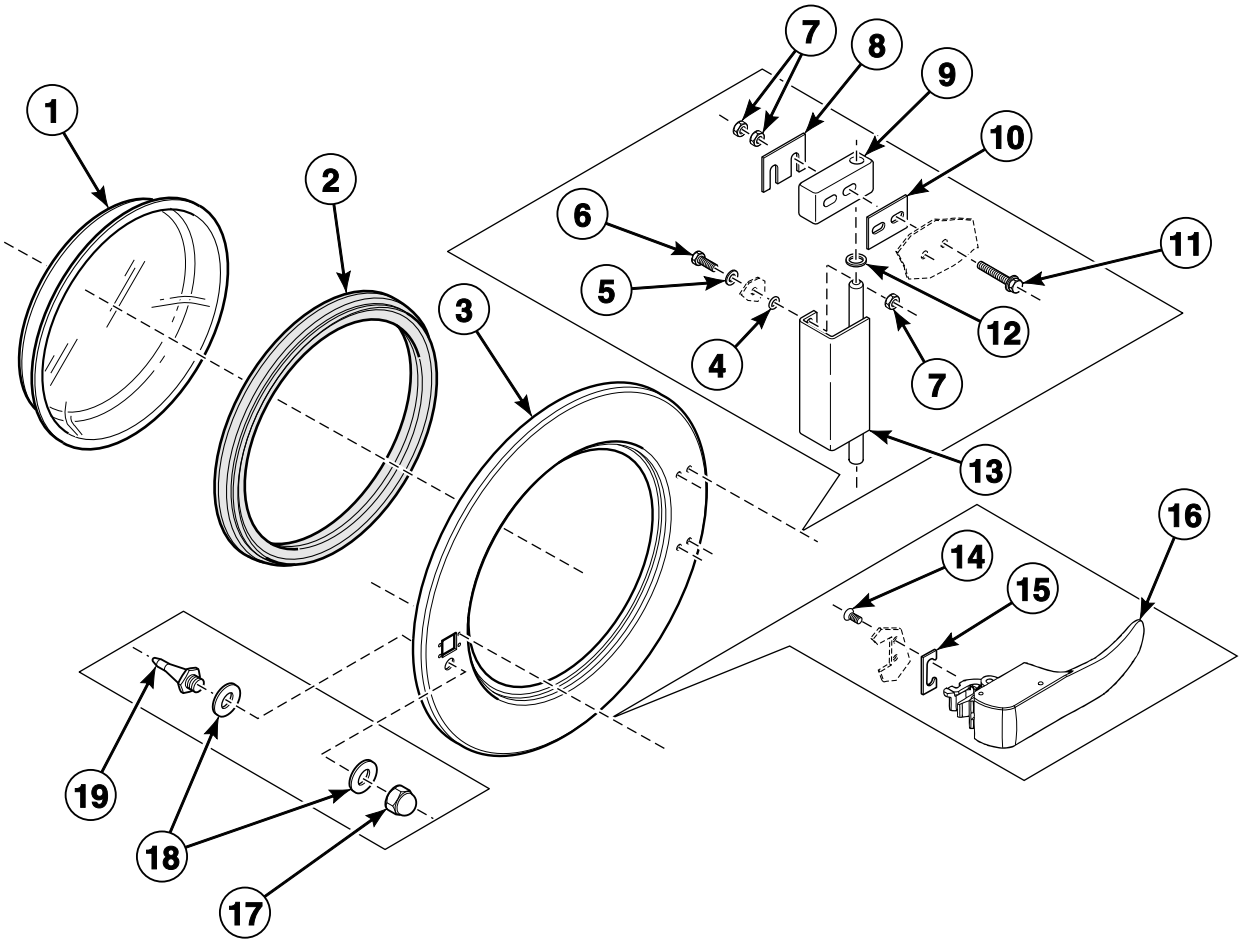

BE000190CP_D0887

© Copyright, Alliance Laundry Systems LLC – DO NOT COPY or TRANSMIT

Door

REF	PART NO.	DESCRIPTION	COMMENTS
1	B12449801	Door Glass	
2	223/00068/00	Door Glass Seal	
3	118/00125/00	Door	
4	217/00021/00	O-Ring	
5	202/00101/00	Washer	
6	205/00104/00	Bolt	
7	204/00106/00	Nut	
8	111/00003/00	Door Hinge Plate Assembly	
9	253/00022/00	Door Hinge Block	
10	118/00122/00	Door Hinge Spacer	1.5 mm
	118/00124/00	Door Hinge Spacer	2 mm
11	207/00126/00	Screw	
12	202/00104/00	Washer	
13	221/00004/00	Hinge	
14	B12500801	Screw	
15	217/00016/00	Door Handle Stop	
16	217/00059/00	Door Handle	IWF and WF models; Black
	217/00065/00	Door Handle	CWF and WF models; Gray
17	204/00103/00	Nut	
18	202/00111/00	Washer	
19	211/00109/02	Door Lock Pin Kit	

© Copyright, Alliance Laundry Systems LLC – DO NOT COPY or TRANSMIT

Control Panel - Cygnus Professional

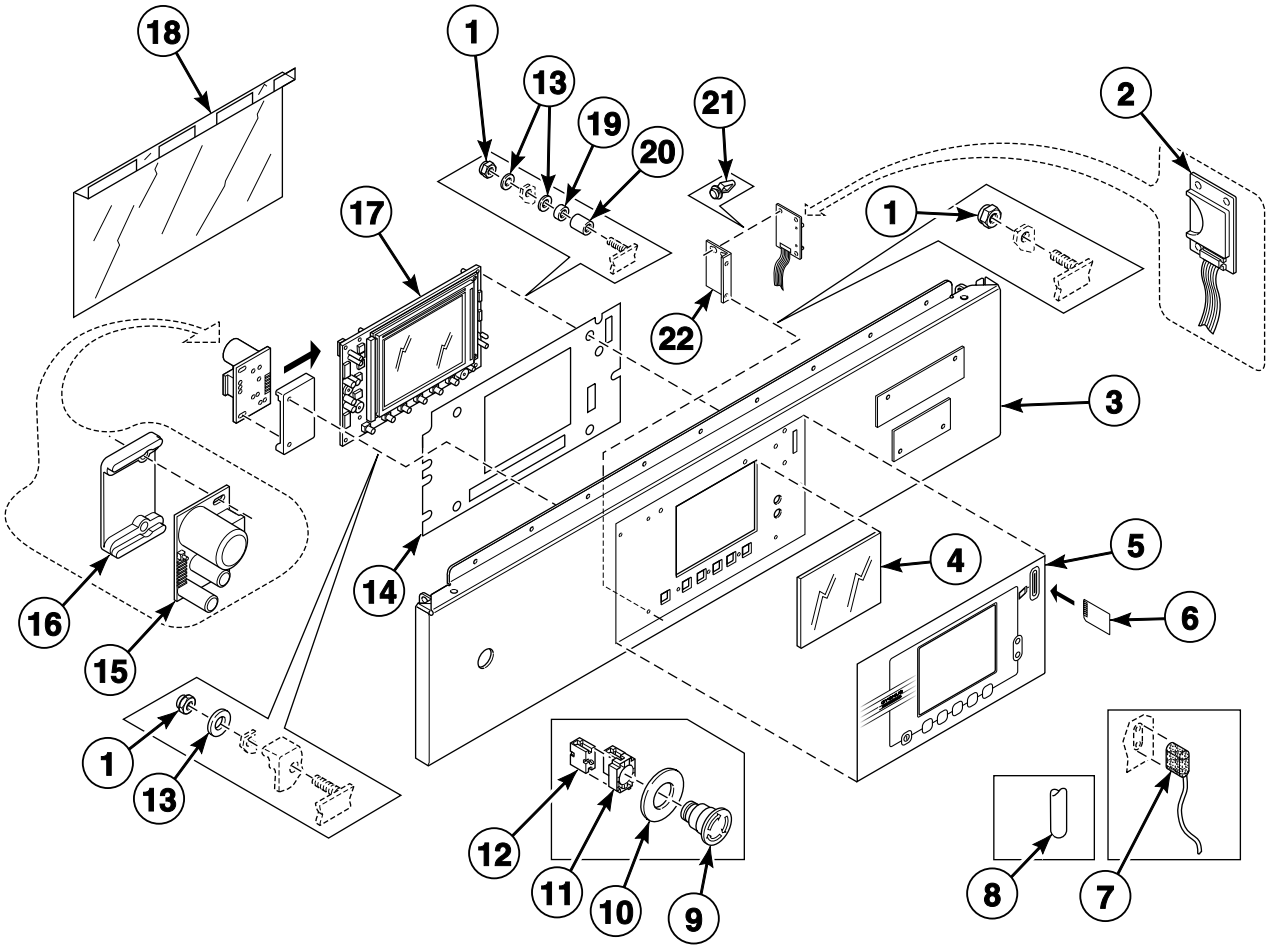

BE000855AP_D0887

© Copyright, Alliance Laundry Systems LLC – DO NOT COPY or TRANSMIT

Control Panel - Cygnus Professional

REF	PART NO.	DESCRIPTION	COMMENTS
1	204/00116/00	Nut	
2	B12305201	Memory Card PC-Board	Models prior to 4/5/11 require a firmware upgrade
	B12538301	Data Card Ribbon Assembly	
3	111/00301/30	Control Panel	Models IWF235ZN2 and WF235_CYGNUS-PRO
	111/00331/30	Control Panel	Models IWF305ZN2, IWF400ZN2, WF305_CYGNUS-PRO and WF400_CYGNUS-PRO
4	225/00321/00	Plexi Frame	
5	225/10313/00	Operating Sticker	
6	209/02022/00	Datacard	
7	210/00901/00	Optic Cable	
8	223/00348/00	Datacard Cover	
9	209/00248/20	Mushroom Pushbutton	
10	209/00520/00	Telem Sticker	
11	209/00099/20	Emergency Switch Pushbutton	
12	209/00099/26	Contact Switch	
13	223/00123/00	Washer	
14	229/00268/00	Insulating Sticker	
15	209/02010/00	Door Lock PC-Board	
16	223/00374/00	Mounting Plate	
17	209/02002/00	Display PC-Board	
18	229/00289/00	Circuit Board Cover	
19	211/00128/00	Printboard Separator	
20	211/00122/00	Standoff	
21	211/00145/00	Standoff	
22	111/01893/00	Printboard Support Card	

© Copyright, Alliance Laundry Systems LLC – DO NOT COPY or TRANSMIT

Control Panel - Cygnus Premium OPL

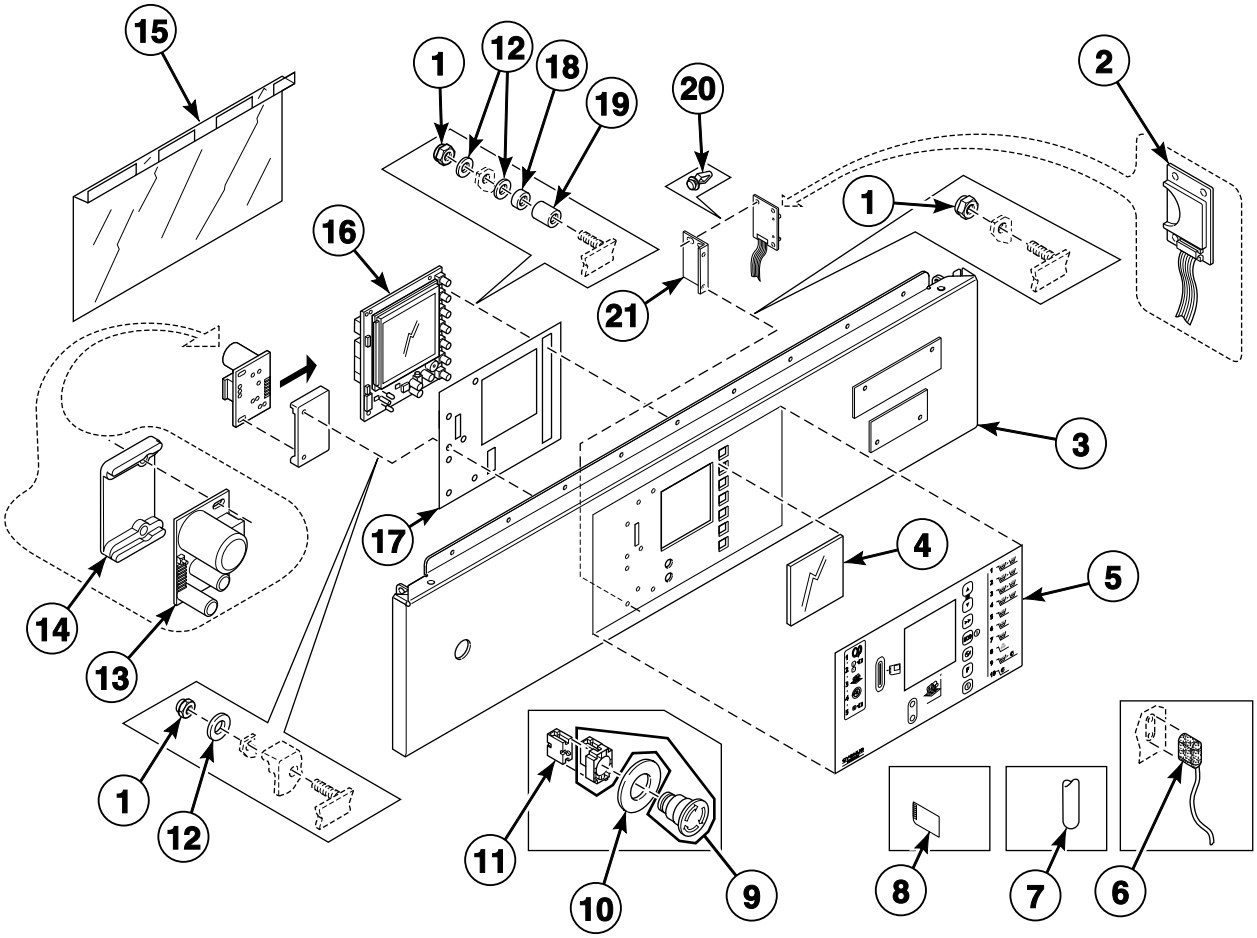

BE000881P_D0887

© Copyright, Alliance Laundry Systems LLC – DO NOT COPY or TRANSMIT

Control Panel - Cygnus Premium OPL

REF	PART NO.	DESCRIPTION	COMMENTS
1	204/00116/00	Nut	
2	B12305201	Memory Card PC-Board	Models prior to 4/5/11 require a firmware upgrade
	B12538301	Data Card Ribbon Assembly	
3	111/00331/33	Control Panel	Models WF305_CYGNUS-PREM_OPL and WF400_CYGNUS-PREM_OPL
	111/00301/33	Control Panel	Model WF235_CYGNUS-PREM_OPL
4	225/00323/00	Plexi Frame	
5	225/10404/00	Operating Sticker	With dataflash card opening
	225/10427/00	Operating Sticker	Without dataflash card opening
6	210/00901/00	Optic Cable	
7	223/00348/00	Datacard Cover	
8	209/02022/00	Datacard	
9	209/00099/20	Emergency Switch Pushbutton	
10	209/00520/00	Telem Sticker	
11	209/00099/26	Contact Switch	
12	223/00123/00	Washer	
13	209/02010/00	Door Lock PC-Board	
14	223/00374/00	Mounting Plate	
15	229/00289/00	Circuit Board Cover	
16	209/02015/02	Printboard	
17	229/00291/00	Insulating Sticker	
18	211/00128/00	Printboard Separator	
19	211/00122/00	Standoff	
20	211/00145/00	Standoff	
21	111/01893/00	Printboard Support Card	

© Copyright, Alliance Laundry Systems LLC – DO NOT COPY or TRANSMIT

Control Panel - Cygnus Premium Coin

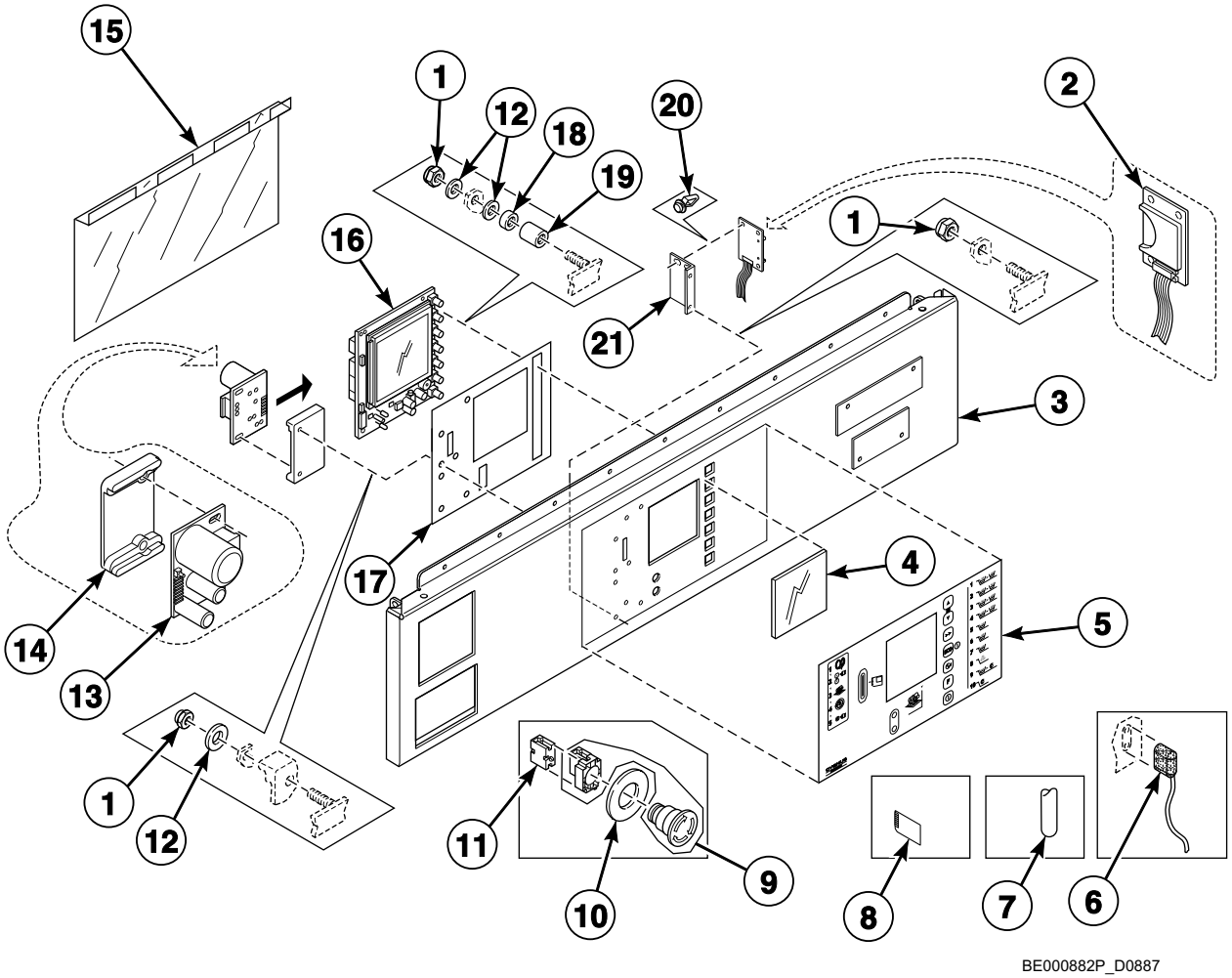

© Copyright, Alliance Laundry Systems LLC – DO NOT COPY or TRANSMIT

Control Panel - Cygnus Premium Coin

REF	PART NO.	DESCRIPTION	COMMENTS
1	204/00116/00	Nut	
2	B12305201	Memory Card PC-Board	Models prior to 4/5/11 require a firmware upgrade
	B12538301	Data Card Ribbon Assembly	
3	111/00331/34	Control Panel	Models WF305_CYGNUS-PREM_COIN and WF400_CYGNUS-PREM_COIN
	111/00301/34	Control Panel	Model WF235_CYGNUS-PREM_COIN
4	225/00323/00	Plexi Frame	
5	225/10405/00	Operating Sticker	With ECO
	225/10477/00	Operating Sticker	Without ECO
6	210/00901/00	Optic Cable	
7	223/00348/00	Datacard Cover	
8	209/02022/00	Datacard	
9	209/00099/20	Emergency Switch Pushbutton	
10	209/00520/00	Telem Sticker	
11	209/00099/26	Contact Switch	
12	223/00123/00	Washer	
13	209/02010/00	Door Lock PC-Board	
14	223/00374/00	Mounting Plate	
15	229/00289/00	Circuit Board Cover	
16	209/02015/02	Printboard	
17	229/00291/00	Insulating Sticker	
18	211/00128/00	Printboard Separator	
19	211/00122/00	Standoff	
20	211/00145/00	Standoff	
21	111/01893/00	Printboard Support Card	

© Copyright, Alliance Laundry Systems LLC – DO NOT COPY or TRANSMIT

Control Panel - Cygnus Standard/Commercial OPL

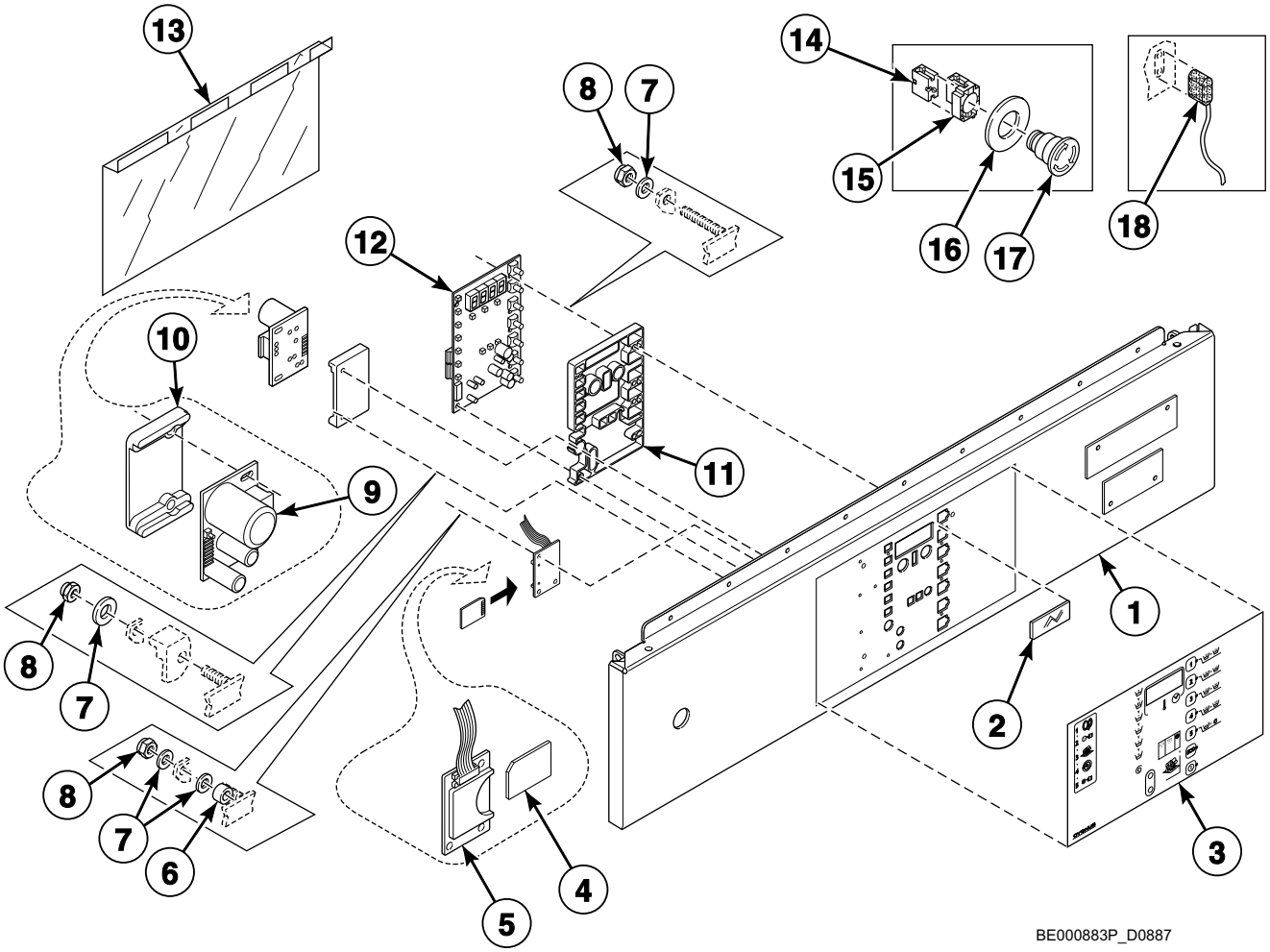

© Copyright, Alliance Laundry Systems LLC – DO NOT COPY or TRANSMIT

Control Panel - Cygnus Standard/Commercial OPL

REF	PART NO.	DESCRIPTION	COMMENTS
1	111/00331/31	Control Panel	Models WF305_CYGNUS-COMM_OPL, WF305_CYGNUS-STANDARD_OPL, WF400_CYGNUS-COMM_OPL and WF400_CYGNUS-STANDARD_OPL
	111/00301/31	Control Panel	Models WF235_CYGNUS-COMM_OPL and WF235_CYGNUS-STANDARD_OPL
2	225/00322/00	Plexi Frame	
3	225/10307/00	Operating Sticker	Models WF235_CYGNUS-STANDARD_OPL, WF305_CYGNUS-STANDARD_OPL and WF400_CYGNUS-STANDARD_OPL
	225/10308/00	Operating Sticker	Models WF235_CYGNUS-COMM_OPL, WF305_CYGNUS-COMM_OPL and WF400_CYGNUS-COMM_OPL
4	209/02022/00	Datacard	
5	B12305201	Memory Card PC-Board	Models prior to 4/5/11 require a firmware upgrade
	B12538301	Data Card Ribbon Assembly	
6	211/00128/00	Printboard Separator	
7	223/00123/00	Washer	
8	204/00116/00	Nut	
9	209/02010/00	Door Lock PC-Board	
10	223/00374/00	Mounting Plate	
11	223/00330/00	Protection LED	
12	209/02001/02	Printboard	
13	229/00289/00	Circuit Board Cover	
14	209/00099/26	Contact Switch	
15	209/00099/20	Emergency Switch Pushbutton	
16	209/00520/00	Telem Sticker	
17	209/00248/20	Mushroom Pushbutton	
18	210/00901/00	Optic Cable	

© Copyright, Alliance Laundry Systems LLC – DO NOT COPY or TRANSMIT

Control Panel - Cygnus Standard/Commercial Coin

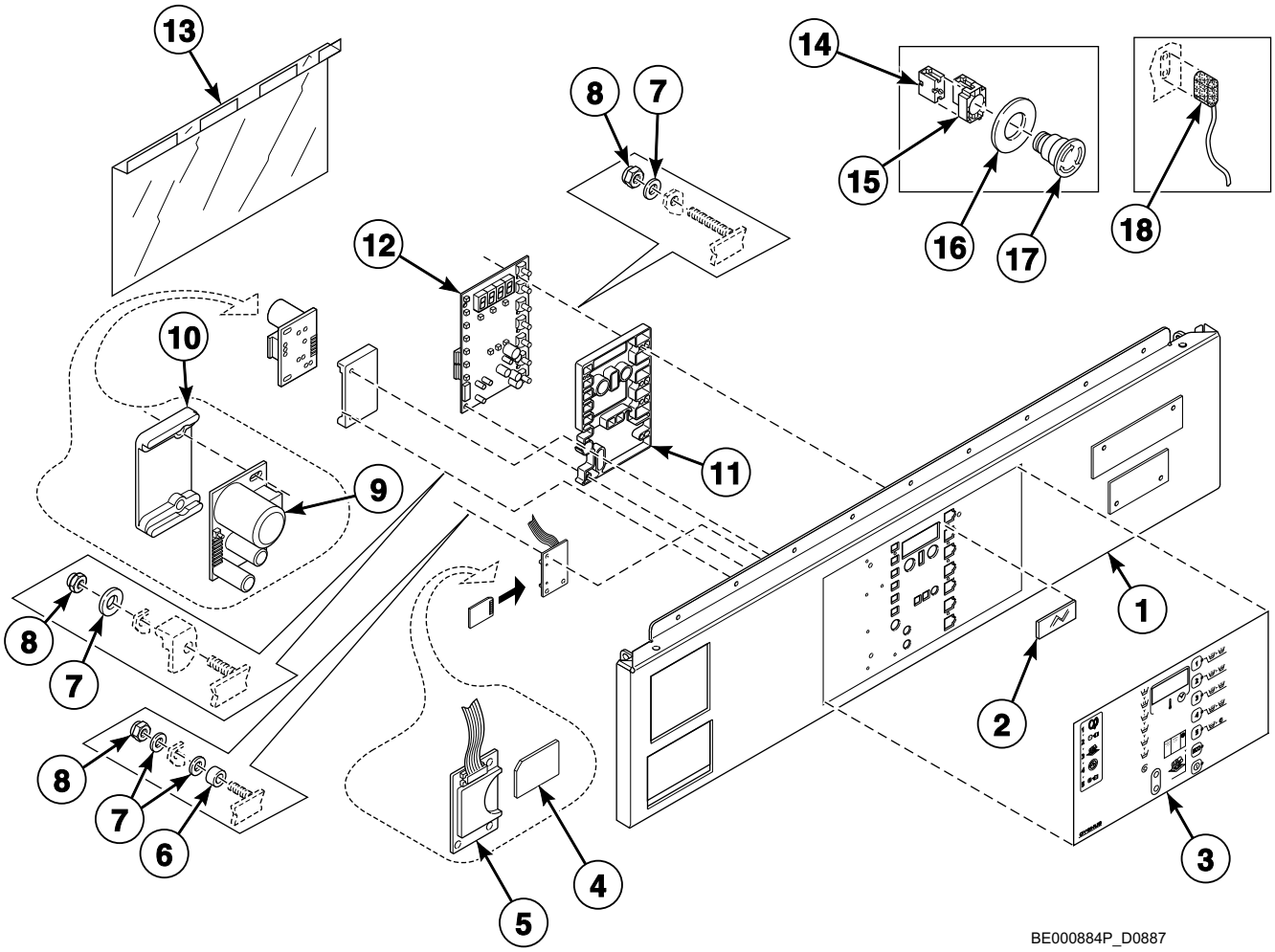

© Copyright, Alliance Laundry Systems LLC – DO NOT COPY or TRANSMIT

Control Panel - Cygnus Standard/Commercial Coin

REF	PART NO.	DESCRIPTION	COMMENTS
1	111/00331/32	Control Panel	Models WF305_CYGNUS-COMM_COIN, WF305_CYGNUS-STANDARD_COIN, WF400_CYGNUS-COMM_COIN and WF400_CYGNUS-STANDARD_COIN
	111/00301/32	Control Panel	Models WF235_CYGNUS-COMM_COIN and WF235_CYGNUS-STANDARD_COIN
2	225/00322/00	Plexi Frame	
3	225/10307/00	Operating Sticker	Models WF235_CYGNUS-STANDARD_COIN, WF305_CYGNUS-STANDARD_COIN and WF400_CYGNUS-STANDARD_COIN
	225/10308/00	Operating Sticker	Models WF235_CYGNUS-COMM_COIN, WF305_CYGNUS-COMM_COIN and WF400_CYGNUS-COMM_COIN
4	209/02022/00	Datacard	
5	B12305201	Memory Card PC-Board	Models prior to 4/5/11 require a firmware upgrade
	B12538301	Data Card Ribbon Assembly	
6	211/00128/00	Printboard Separator	
7	223/00123/00	Washer	
8	204/00116/00	Nut	
9	209/02010/00	Door Lock PC-Board	
10	223/00374/00	Mounting Plate	
11	223/00330/00	Protection LED	
12	209/02001/02	Printboard	
13	229/00289/00	Circuit Board Cover	
14	209/00099/26	Contact Switch	
15	209/00099/20	Emergency Switch Pushbutton	
16	209/00520/00	Telem Sticker	
17	209/00248/20	Mushroom Pushbutton	
18	210/00901/00	Optic Cable	

© Copyright, Alliance Laundry Systems LLC – DO NOT COPY or TRANSMIT

Control Panel - Micro-20 OPL

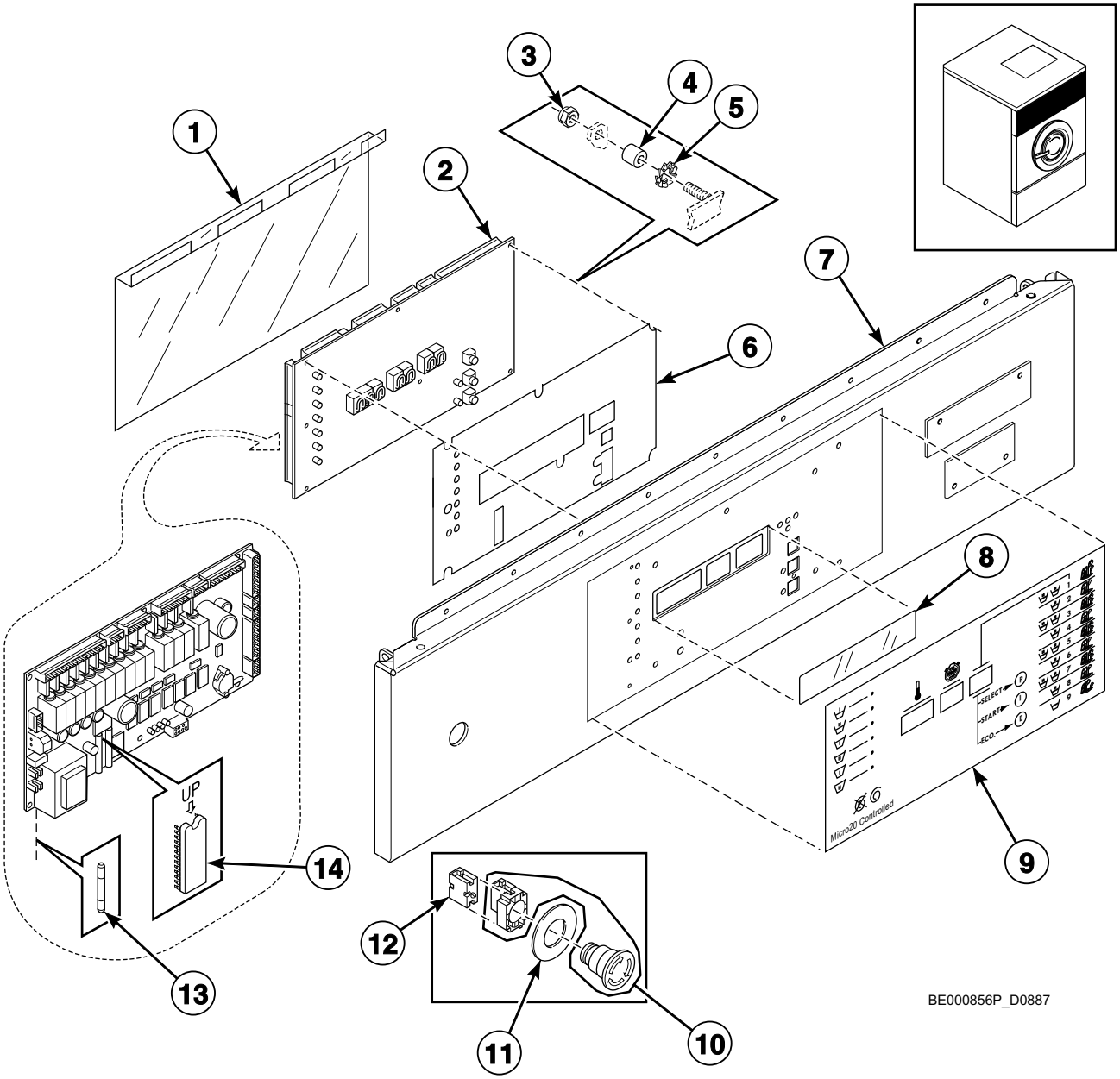

© Copyright, Alliance Laundry Systems LLC – DO NOT COPY or TRANSMIT

Control Panel - Micro-20 OPL

REF	PART NO.	DESCRIPTION	COMMENTS
1	229/00289/00	Circuit Board Cover	
2	209/00440/70	Printboard	220 Volt
	209/00440/80	Printboard	115 Volt
3	204/00116/00	Nut	
4	211/00122/00	Standoff	
5	203/00006/00	Washer	
6	229/00255/00	Insulating Sticker	
7	111/00301/00	Control Panel	*55 and *235 models
	111/00331/00	Control Panel	*75, *90, *305 and *400 models
8	225/00316/00	Plexi Frame	
9	225/00407/00	Keypad Sticker	With ECO
	225/00408/00	Operating Sticker	Without ECO
10	209/00248/20	Mushroom Pushbutton	
11	209/00520/00	Telem Sticker	
12	209/00099/26	Contact Switch	
13	209/00439/00	Fuse	500 mA
14	209/00266/01	Eprom	

© Copyright, Alliance Laundry Systems LLC – DO NOT COPY or TRANSMIT

Control Panel - Micro-20 Coin

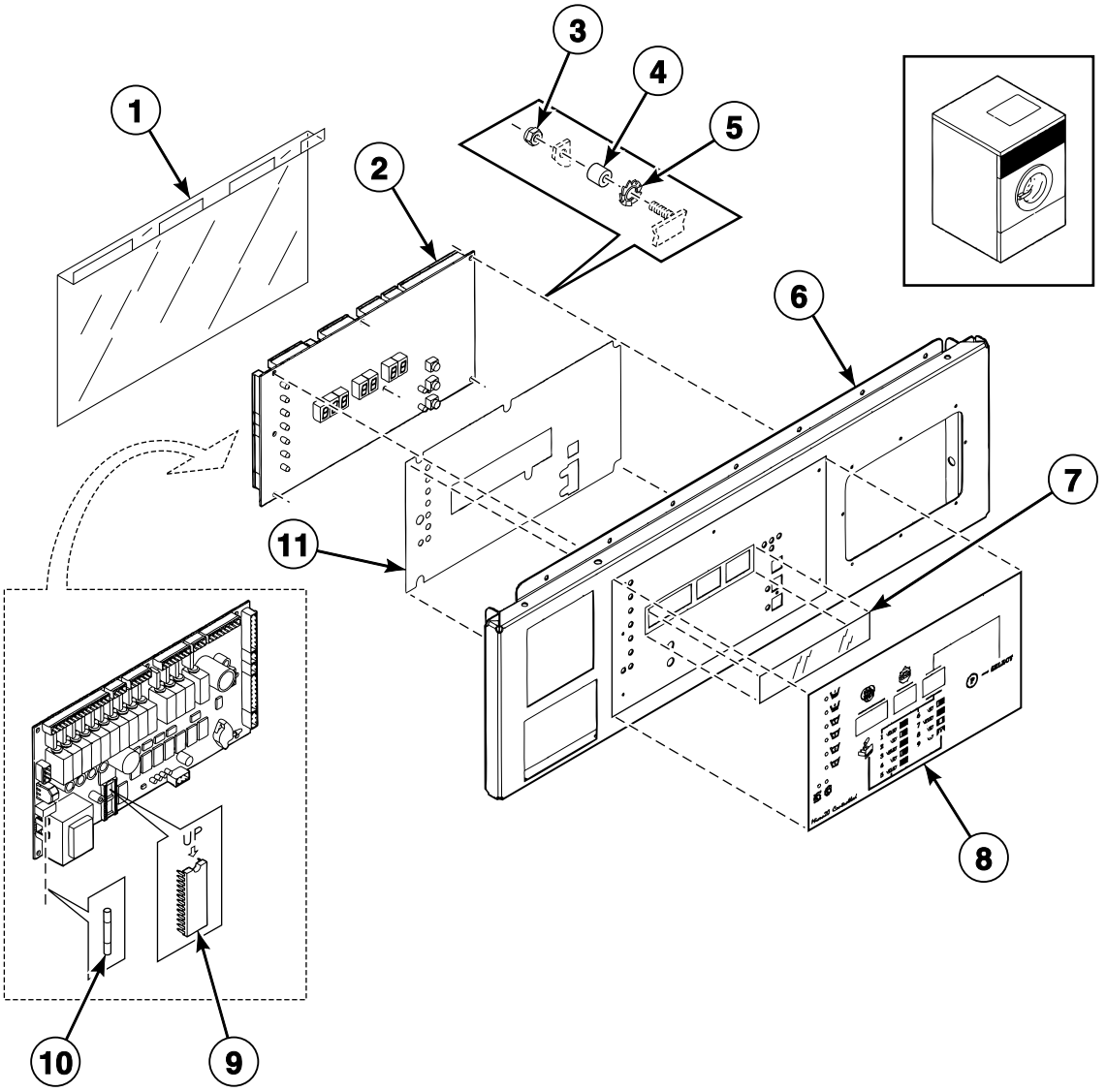

BE000819P_D0887

© Copyright, Alliance Laundry Systems LLC – DO NOT COPY or TRANSMIT

Control Panel - Micro-20 Coin

REF	PART NO.	DESCRIPTION	COMMENTS
1	229/00289/00	Circuit Board Cover	
2	209/00440/70	Printboard	220 Volt
	209/00440/80	Printboard	115 Volt
3	204/00116/00	Nut	
4	211/00122/00	Standoff	
5	203/00006/00	Washer	
6	111/01823/00	Upper Front Panel	
7	225/00316/00	Plexi Frame	
8	225/00410/00	Operating Sticker	
9	209/00266/01	Eprom	Standard software
10	209/00439/00	Fuse	500 mA
11	229/00255/00	Insulating Sticker	

© Copyright, Alliance Laundry Systems LLC – DO NOT COPY or TRANSMIT

Control Panel - Sigma Coin

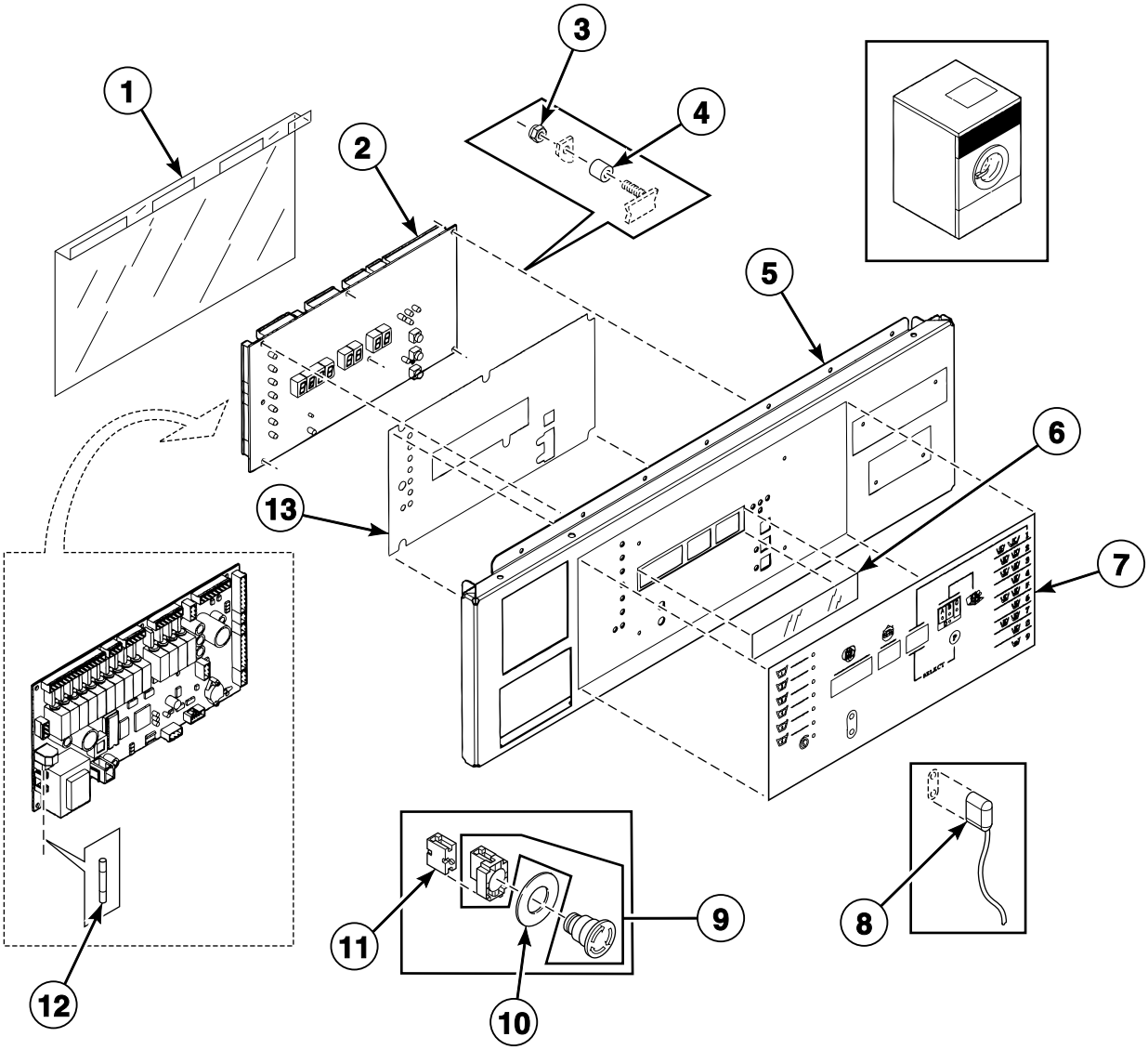

BE000629P_D0887

© Copyright, Alliance Laundry Systems LLC – DO NOT COPY or TRANSMIT

Control Panel - Sigma Coin

REF	PART NO.	DESCRIPTION	COMMENTS
1	229/00262/00	Circuit Board Cover	
2	209/00547/00	Control Board	
3	204/00114/00	Nut	
4	211/00122/00	Standoff	
5	111/00301/10	Control Panel	*55 and *235 models
	111/00331/10	Control Panel	*75, *90, *305 and *400 models
6	225/00316/00	Plexi Frame	
7	225/00403/00	Decal	
8	210/00902/00	Infrared Cable	
9	209/00248/20	Mushroom Pushbutton	
10	209/00520/00	Telem Sticker	
11	209/00099/26	Contact Switch	
12	209/00439/00	Fuse	500 mA
13	229/00255/00	Insulating Sticker	

© Copyright, Alliance Laundry Systems LLC – DO NOT COPY or TRANSMIT

Control Panel - Sigma OPL

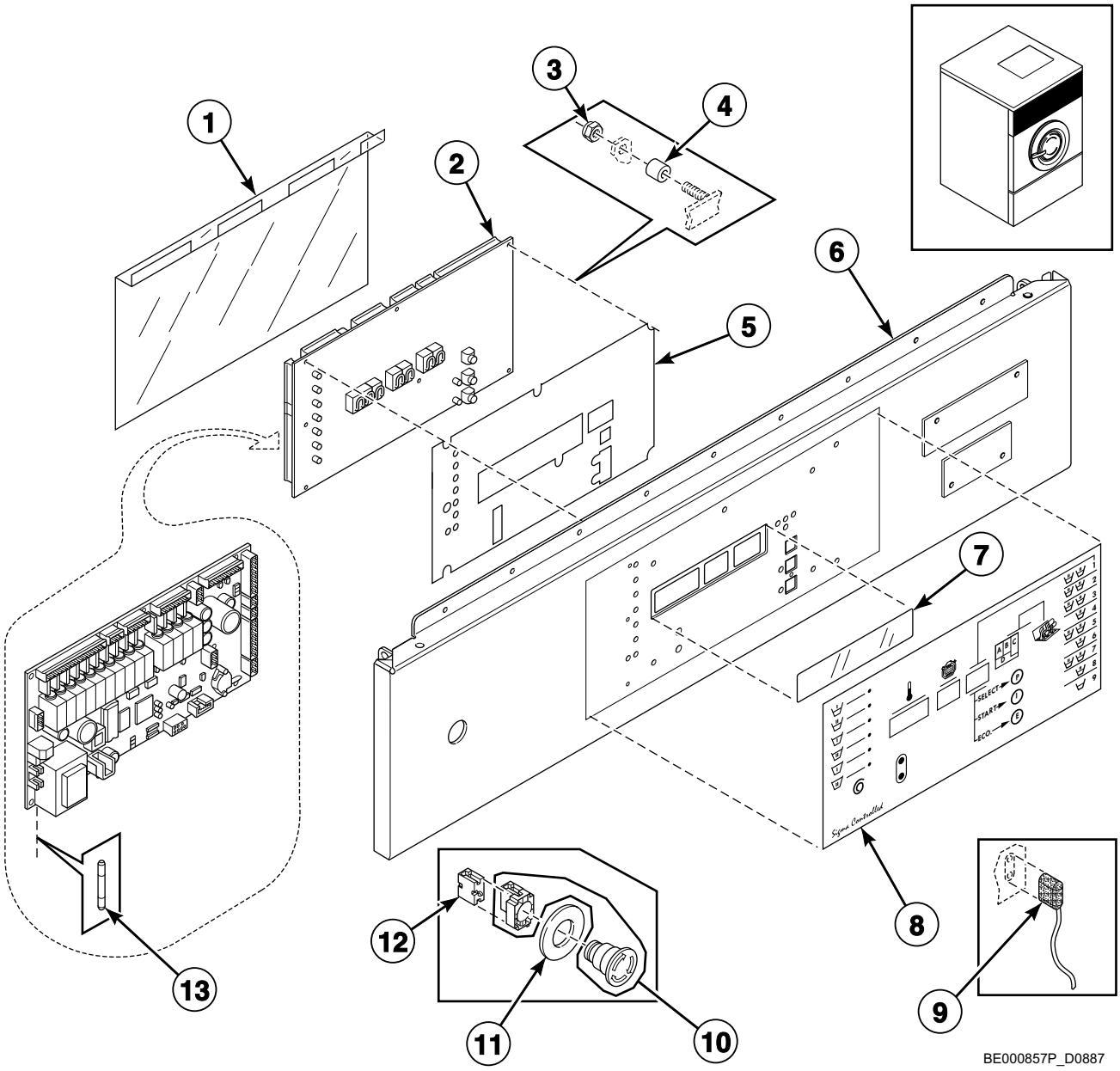

© Copyright, Alliance Laundry Systems LLC – DO NOT COPY or TRANSMIT

Control Panel - Sigma OPL

REF	PART NO.	DESCRIPTION	COMMENTS
1	229/00262/00	Circuit Board Cover	
2	209/00547/00	Control Board	
3	204/00114/00	Nut	
4	211/00122/00	Standoff	
5	229/00255/00	Insulating Sticker	
6	111/00301/00	Control Panel	Model WF235_SIGMA_OPL
	111/00331/00	Control Panel	Models WF305_SIGMA_OPL and WF400_SIGMA_OPL
7	225/00316/00	Plexi Frame	
8	225/00404/00	Operating Sticker	With ECO
	225/00405/00	Operating Sticker	Without ECO
9	210/00902/00	Infrared Cable	
10	209/00248/20	Mushroom Pushbutton	
11	209/00520/00	Telem Sticker	
12	209/00099/26	Contact Switch	
13	209/00439/00	Fuse	500 mA

© Copyright, Alliance Laundry Systems LLC – DO NOT COPY or TRANSMIT

Control Panel - PS40F

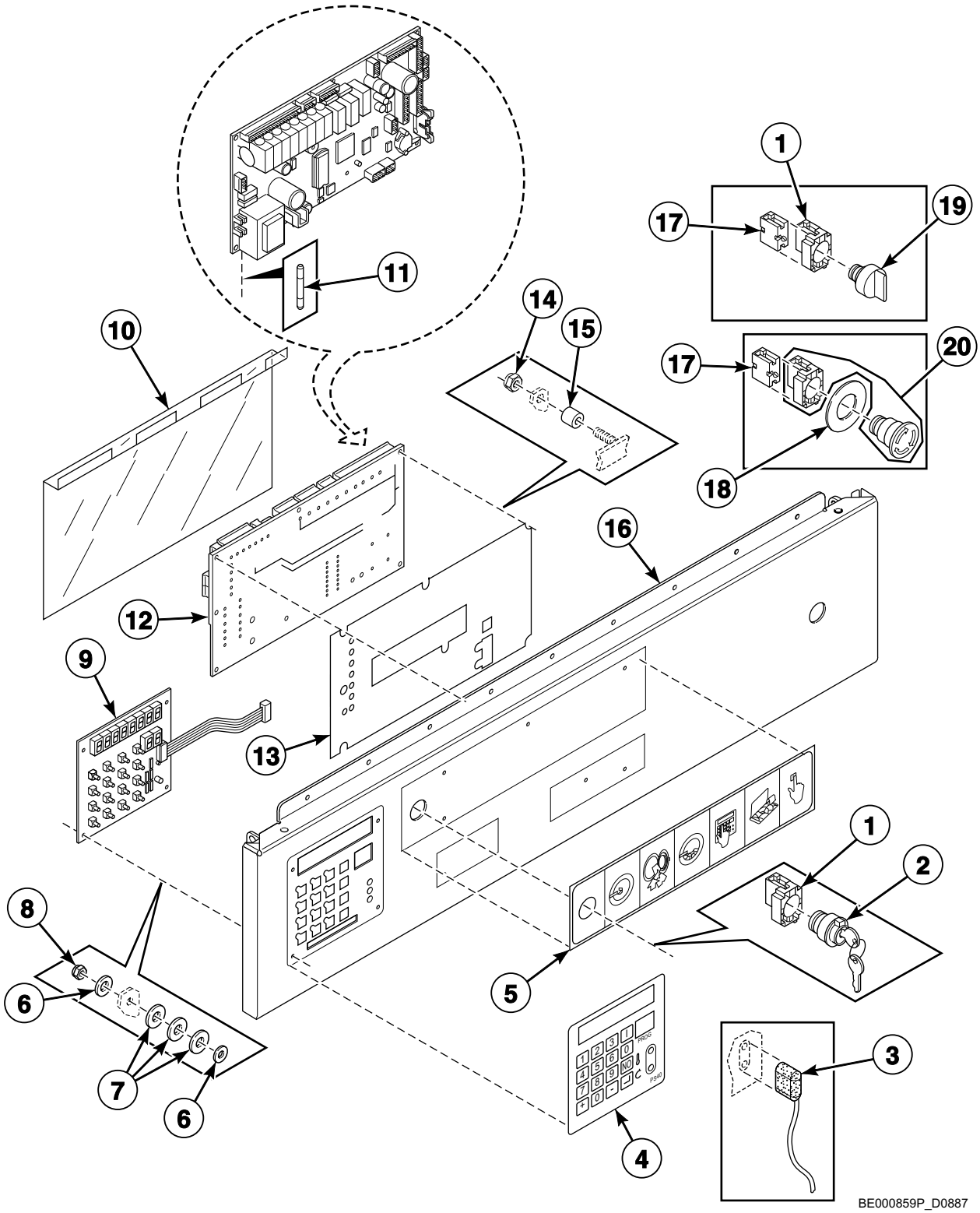

© Copyright, Alliance Laundry Systems LLC – DO NOT COPY or TRANSMIT

Control Panel - PS40F

REF	PART NO.	DESCRIPTION	COMMENTS
1	209/00099/25	Switch Base	
2	209/00326/20	Programming Key Contact Switch	
3	210/00902/00	Infrared Cable	
4	225/00397/00	Label	
5	225/00400/00	Operating Sticker	
6	223/00123/00	Washer	
7	223/00051/10	Washer	
8	204/00116/00	Nut	
9	209/00552/01	Keypad	
10	229/00262/00	Circuit Board Cover	
11	209/00372/01	Fuse	
12	B12351701	Main Board	
13	229/00255/00	Insulating Sticker	
14	204/00116/00	Nut	
15	211/00122/00	Standoff	
16	111/00301/20	Control Panel	*55 and *235 models
	111/00331/20	Control Panel	*75, *90, *305 and *400 models
17	209/00099/26	Contact Switch	
18	209/00520/00	Telem Sticker	
19	209/00099/29	Switch Knob	
20	209/00248/20	Mushroom Pushbutton	

© Copyright, Alliance Laundry Systems LLC – DO NOT COPY or TRANSMIT

Coin Drop - Mechanical Coin Meter

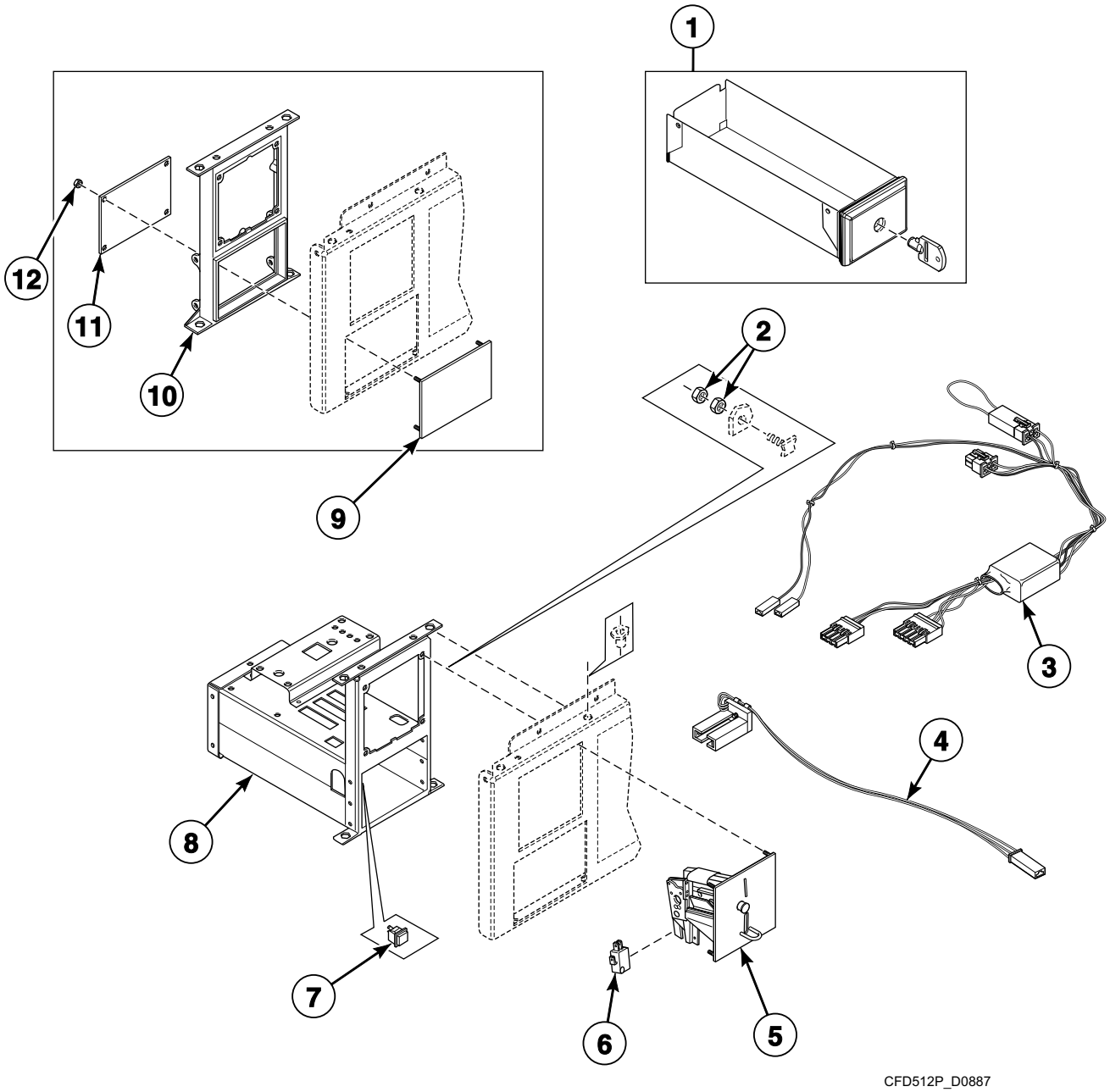

© Copyright, Alliance Laundry Systems LLC – DO NOT COPY or TRANSMIT

Coin Drop - Mechanical Coin Meter

REF	PART NO.	DESCRIPTION	COMMENTS
	B12388101	Single Drop Optical Sensor Kit	Includes items 3 and 4
	B12388102	Dual Drop Optical Sensor Kit	Includes items 3 and 4
1	254/00077/00	Coin Box	
	254/00077/02	Key	
2	204/00008/00	Nut	
3	B12359901	Wire Assembly	Micro-20 and Sigma models
4	209/00781/00	Optical Switch	Micro-20 and Sigma models
5	B12311224	Coin Drop	Mechanical; Jeton 5K
	B12311206	Coin Drop	Mechanical; Jeton 7K
	B12311201	Coin Drop	Mechanical; Jeton 10K
	B12311210	Coin Drop	Mechanical; Jeton 12K
	B12311252	Coin Drop	Mechanical; Jeton 10K and .5 euro
	B12311211	Coin Drop	Mechanical; Jeton 7K and 1 euro
	B12323901	Coin Drop	Mechanical; Jeton 15K and 7K
	B12311204	Coin Drop	Mechanical; Jeton gettone
	B12311234	Coin Drop	Mechanical; Jeton crouzet
	B12311247	Coin Drop	Mechanical; Jeton 118-1
	B12311248	Coin Drop	Mechanical; Jeton 118-5
	B12311222	Coin Drop	Mechanical; 1 euro
	B12311214	Coin Drop	Mechanical; .5 euro
	B12311202	Coin Drop	Mechanical; .5 and 1 euro
	B12311239	Coin Drop	Mechanical; .5 and 2 euro
	B12311205	Coin Drop	Mechanical; .2 and 1 euro
	B11211209	Coin Drop	Mechanical; .2 and .5 euro
	B12311218	Coin Drop	Mechanical; 1 and 1 euro
	B12311219	Coin Drop	Mechanical; 1 and 2 euro
	B12311203	Coin Drop	Mechanical; 1 and 2 frank
	B12311207	Coin Drop	Mechanical; 1 Deense kroon
	B12311225	Coin Drop	Mechanical; 10 Deense kronen
	B12311235	Coin Drop	Mechanical; 10 Tsjechische kronen
	B12311244	Coin Drop	Mechanical; 10 Noorse kronen
	B12311208	Coin Drop	Mechanical; 100 and 500 yen
	B12311212	Coin Drop	Mechanical; 15K
	B12311215	Coin Drop	Mechanical; 1 kro
	B12311226	Coin Drop	Mechanical; Australian 1.00
	B12311216	Coin Drop	Mechanical; Australian .2 and 1.00
	B12311220	Coin Drop	Mechanical; New Zealand 1.00
	B12311221	Coin Drop	Mechanical; .5 and 2 zwitsers
	B12311241	Coin Drop	Mechanical; Hong Kong 1.00
	B12311249	Coin Drop	Mechanical; Hong Kong 5.00
	B12311301	Coin Drop	Mechanical; U.S. $.25
	B12311302	Coin Drop	Mechanical; U.S. $.25 and $1.00
	B12311304	Coin Drop	Mechanical; Canada 1.00 and .25
	B12323401	Coin Drop	Mechanical; Singapore 1.00
6	209/00600/01P	Switch	
7	209/00396/00	Pushbutton	
8	152/00112/00	Mechanical Coin Meter Housing	
9	111/01001/00	Top Panel	Gray
	111/01000/00	Front Plate	Black
10	217/00060/00	Fastening Piece	
11	111/01002/00	Backplate	
12	204/00116/00	Nut	

© Copyright, Alliance Laundry Systems LLC – DO NOT COPY or TRANSMIT

Coin Drop - Electronic Coin Meter

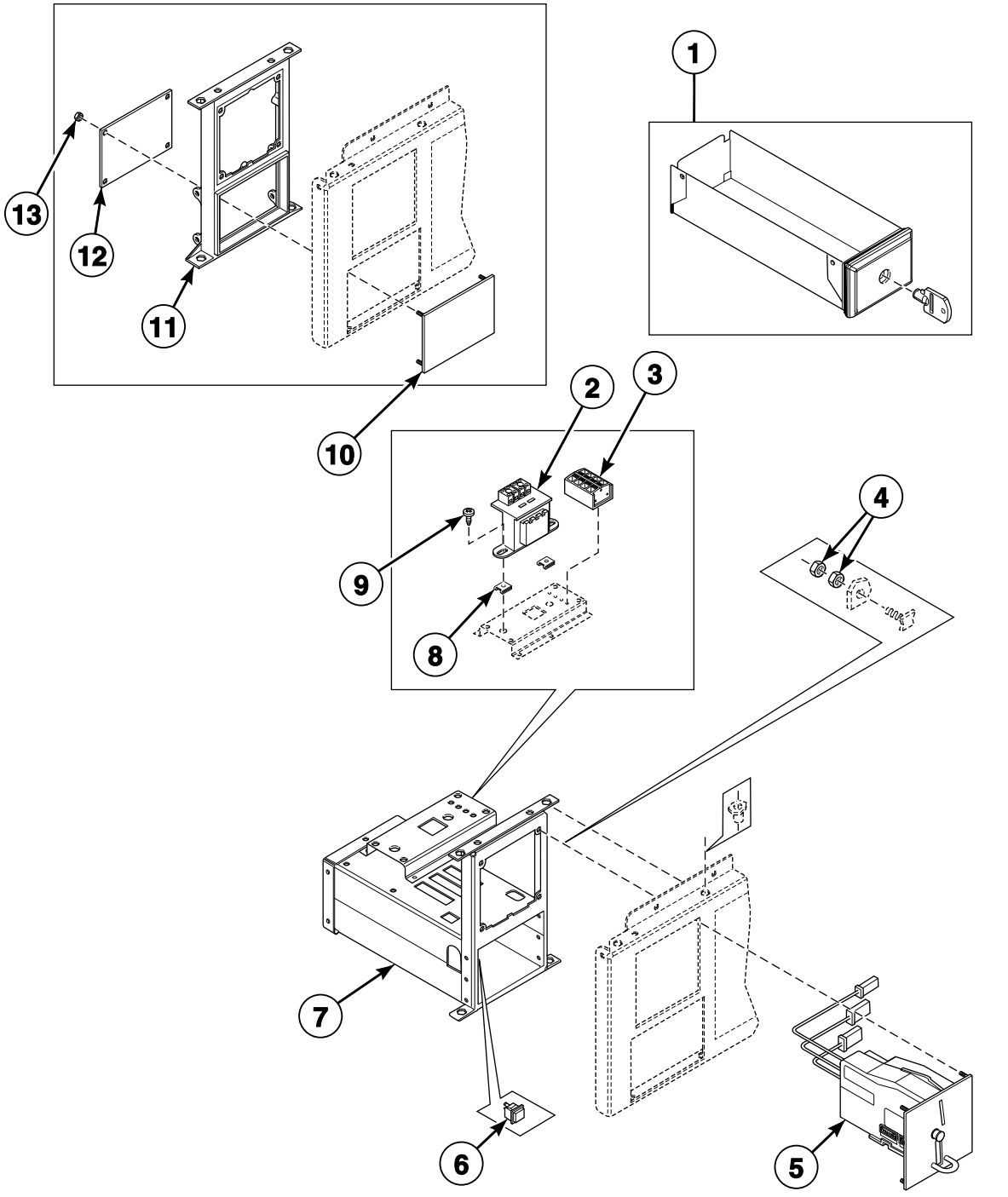

© Copyright, Alliance Laundry Systems LLC – DO NOT COPY or TRANSMIT

Coin Drop - Electronic Coin Meter

REF	PART NO.	DESCRIPTION	COMMENTS
1	254/00077/00	Coin Box	
	254/00077/02	Key	
2	209/00682/00	Transformer	
3	209/00683/00	Input Block	
4	204/00008/00	Nut	
5	B12311401	Coin Drop	Cygnus control models
6	209/00396/00	Pushbutton	
7	152/00112/50	Electronic Coin Meter Housing	
8	208/00002/00	Nut	
9	208/00014/00	Screw	
10	111/01001/00	Top Panel	Gray
	111/01000/00	Front Plate	Black
11	217/00060/00	Fastening Piece	
12	111/01002/00	Backplate	
13	204/00116/00	Nut	

© Copyright, Alliance Laundry Systems LLC – DO NOT COPY or TRANSMIT

Left Side, Lower Front and Upper Back Panels - *55 and *235 Models with Older Style Soap Dispenser Crossbar

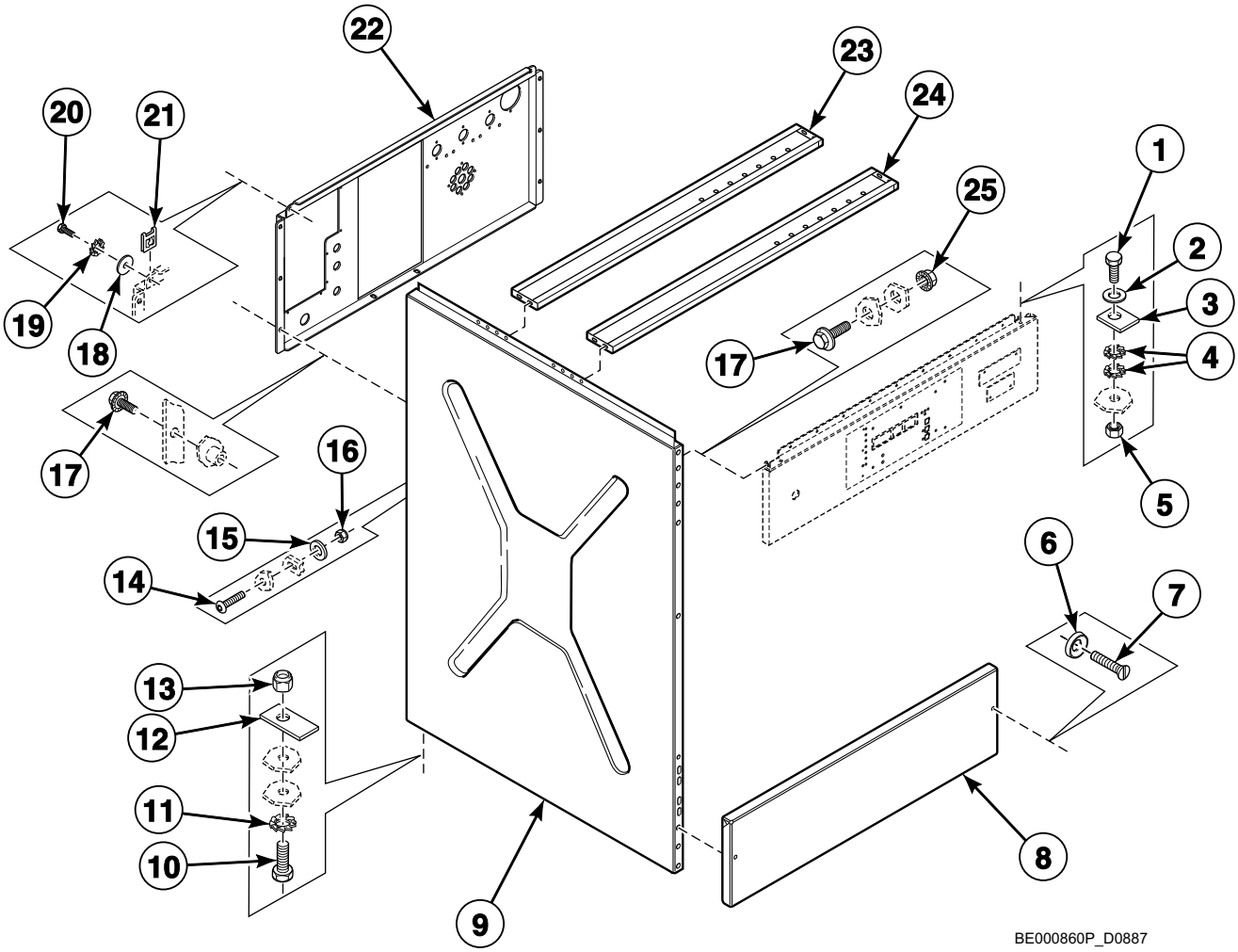

© Copyright, Alliance Laundry Systems LLC – DO NOT COPY or TRANSMIT

Left Side, Lower Front and Upper Back Panels - *55 and *235 Models with Older Style Soap Dispenser Crossbar

REF	PART NO.	DESCRIPTION	COMMENTS
1	205/00106/00	Bolt	
2	202/00003/00	Washer	
3	117/00042/00	Retaining Ring	
4	203/00005/00	Washer	
5	204/00006/00	Nut	
6	208/00009/00	Washer	
7	207/00101/00	Screw	
8	111/00300/00	Kickplate	
9	140/60027/00	Side Panel	Left
10	205/00105/00	Bolt	
11	203/00004/00	Washer	
12	101/00007/00	Outlet Pipe Plate Assembly	
13	204/00009/00	Nut	
14	207/00032/00	Screw	
15	202/00006/00	Washer	
16	204/00007/00	Nut	
17	206/00099/00	Bolt	
18	201/00006/00	Washer	
19	203/00015/00	Washer	
20	208/00014/00	Screw	
21	208/00025/00	Nut	
22	111/00304/00	Backbridge	
23	111/10100/10	Soap Dispenser Front	
24	111/10100/00	Soap Dispenser Back	
25	206/00101/00	Nut	

© Copyright, Alliance Laundry Systems LLC – DO NOT COPY or TRANSMIT

Left Side, Lower Front and Upper Back Panels - *75 and *305 Models with Older Style Soap Dispenser Crossbar

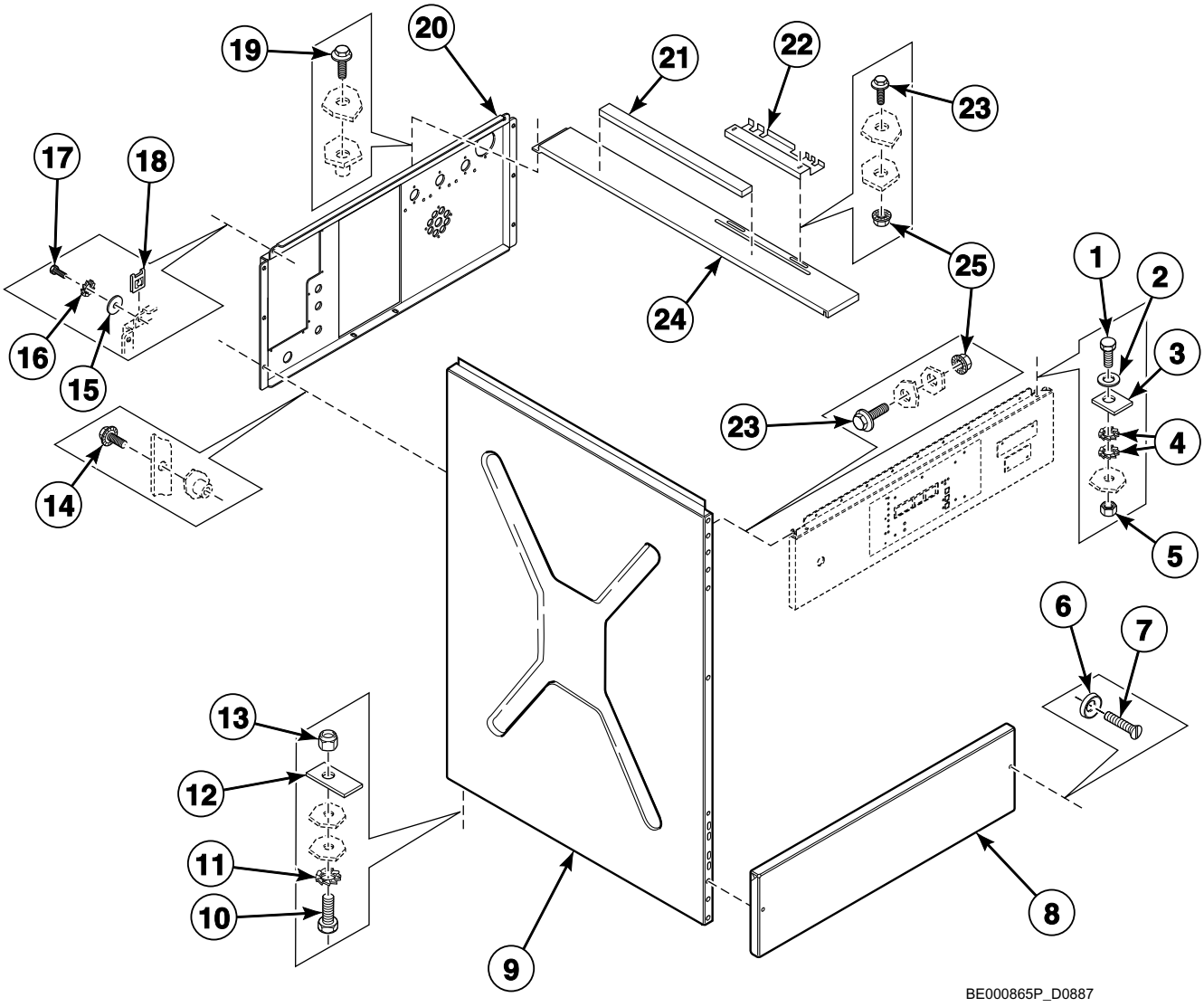

© Copyright, Alliance Laundry Systems LLC – DO NOT COPY or TRANSMIT

Left Side, Lower Front and Upper Back Panels - *75 and *305 Models with Older Style Soap Dispenser Crossbar

REF	PART NO.	DESCRIPTION	COMMENTS
1	205/00106/00	Bolt	
2	202/00003/00	Washer	
3	117/00042/00	Retaining Ring	
4	203/00005/00	Washer	
5	204/00006/00	Nut	
6	208/00009/00	Washer	
7	207/00101/00	Screw	
8	111/00333/00	Kickplate	
9	111/60038/00	Side Panel	Left
10	205/00105/00	Bolt	
11	203/00004/00	Washer	
12	101/00007/00	Outlet Pipe Plate Assembly	
13	204/00009/00	Nut	
14	206/00099/00	Bolt	
15	201/00006/00	Washer	
16	203/00015/00	Washer	
17	208/00014/00	Screw	
18	208/00025/00	Nut	
19	206/00099/00	Bolt	
20	111/00334/10	Backbridge	
21	246/00149/00	Gasket	
22	111/00117/00	Soap Box Support Plate	
23	206/00099/00	Bolt	
24	111/00156/00	Soap Dispenser Crossbar	
25	206/00101/00	Nut	

© Copyright, Alliance Laundry Systems LLC – DO NOT COPY or TRANSMIT

Left Side, Lower Front and Upper Back Panels with Newer Style Soap Dispenser Crossbar

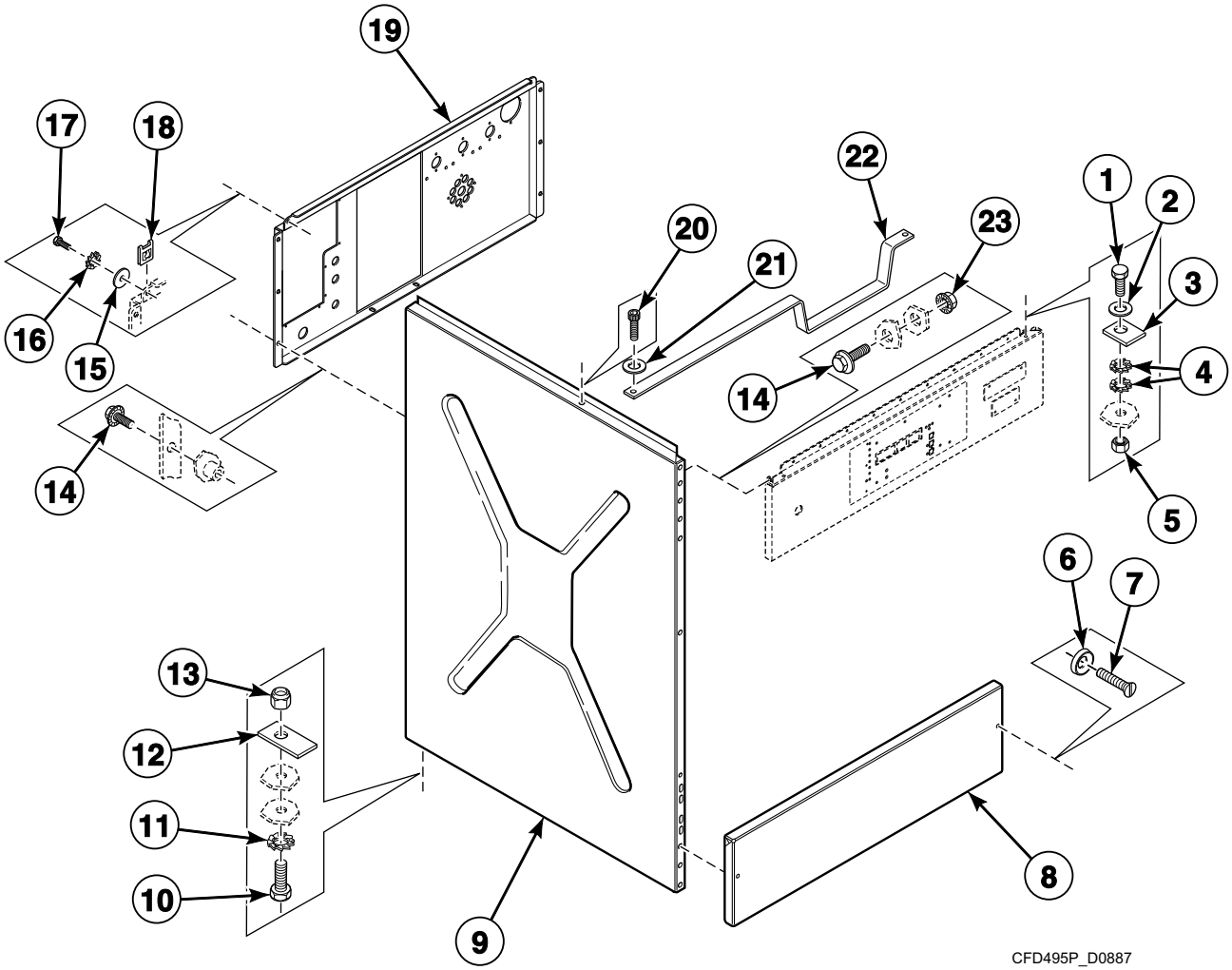

© Copyright, Alliance Laundry Systems LLC – DO NOT COPY or TRANSMIT

Left Side, Lower Front and Upper Back Panels with Newer Style Soap Dispenser Crossbar

REF	PART NO.	DESCRIPTION	COMMENTS
1	205/00106/00	Bolt	
2	202/00003/00	Washer	
3	117/00042/00	Retaining Ring	
4	203/00005/00	Washer	
5	204/00006/00	Nut	
6	208/00009/00	Washer	
7	207/00101/00	Screw	
8	111/00333/00	Kickplate	
9	111/60038/00	Side Panel	*75 and *305 models; Left
	140/60027/00	Side Panel	*55 and *235 models; Left
	133/60127/00	Side Panel	*90 and *400 models; Left
10	205/00105/00	Bolt	
11	203/00004/00	Washer	
12	101/00007/00	Outlet Pipe Plate Assembly	
13	204/00009/00	Nut	
14	206/00099/00	Bolt	
15	201/00006/00	Washer	
16	203/00015/00	Washer	
17	208/00014/00	Screw	
18	208/00025/00	Nut	
19	111/00304/00	Backbridge	
20	206/00166/00	Screw	
21	B12421401	Washer	
22	111/10100/11	Soap Dispenser Crossbar	*55 and *235 models
	111/00156/11	Powder Bin Crossbar	*75, *90, *305 and *400 models
23	206/00101/00	Nut	

© Copyright, Alliance Laundry Systems LLC – DO NOT COPY or TRANSMIT

Right Side, Front, Lower Rear and Top Panels

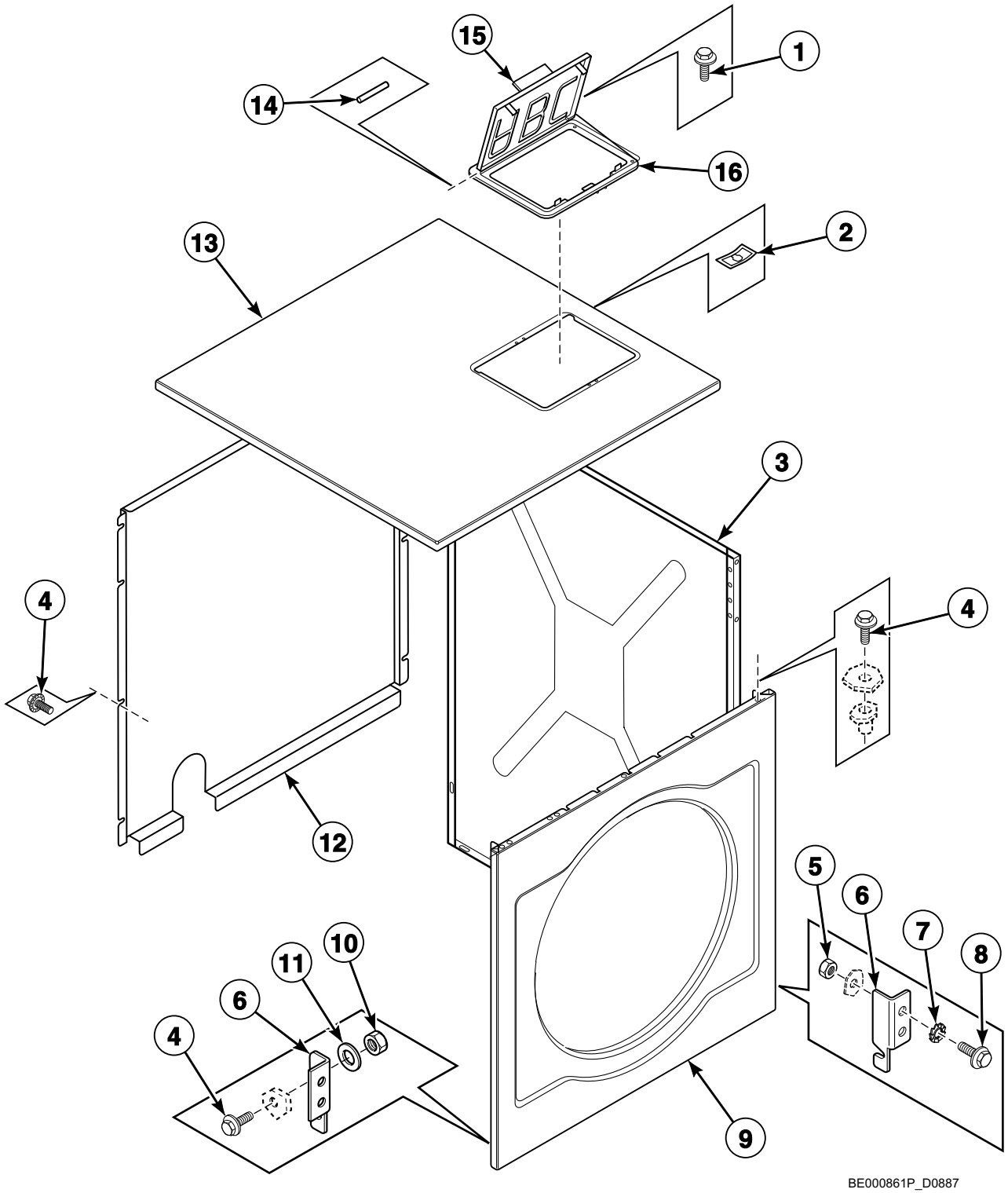

© Copyright, Alliance Laundry Systems LLC – DO NOT COPY or TRANSMIT

Right Side, Front, Lower Rear and Top Panels

REF	PART NO.	DESCRIPTION	COMMENTS
1	207/00103/00	Screw	
2	208/00104/00	Nut	
3	140/60028/00	Side Panel	*55 and *235 models; Right
	111/60038/50	Side Panel	*75 and *305 models; Right
	133/60128/00	Side Panel	*90 and *400 models; Right
4	206/00099/00	Bolt	
5	204/00107/00	Nut	
6	111/10089/01	Reinforcement Plate	
7	203/00005/00	Washer	
8	206/00016/00	Bolt	
9	111/00293/00	Front Panel	*55 and *235 models
	111/00332/00	Front Panel	*75, *90, *305 and *400 models
10	204/00106/00	Nut	
11	201/00007/00	Washer	
12	111/00335/00	Back Panel	*75, *90, *305 and *400 models
	111/00302/00	Back Panel	*55 and *235 models
13	140/00046/00	Top Panel	*55 and *235 models
	111/00330/00	Top Panel	*75 and *305 models
	111/05017/00	Top Panel	*90 and *400 models
14	223/00103/04	Soap Dispenser Cover Hinge Rod	2 required
15	223/00103/01	Soap Dispenser Cover	
16	223/00103/03	Soap Dispenser Frame	

© Copyright, Alliance Laundry Systems LLC – DO NOT COPY or TRANSMIT

Water Inlet Valves

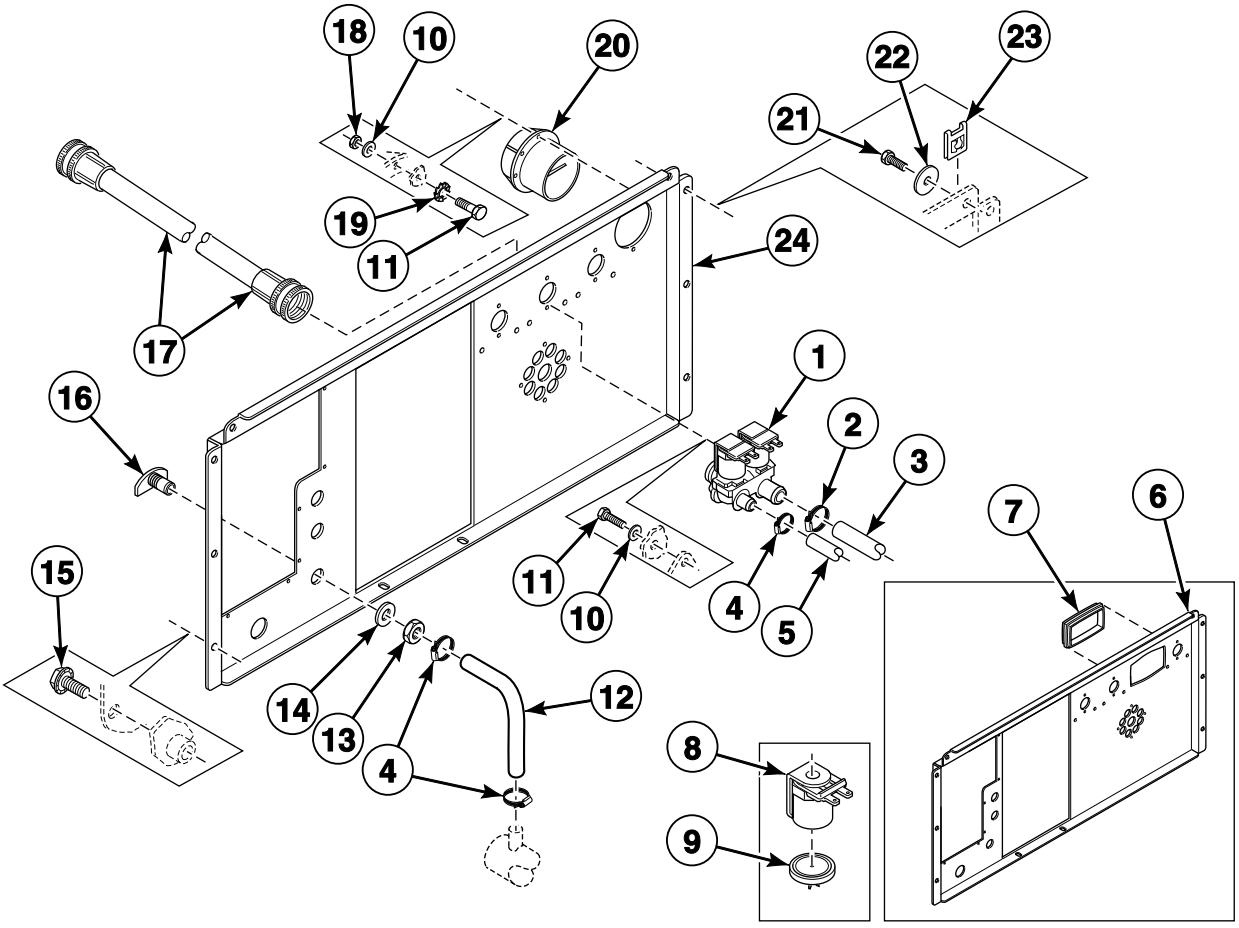

CFD326P_D0887

© Copyright, Alliance Laundry Systems LLC – DO NOT COPY or TRANSMIT

Water Inlet Valves

REF	PART NO.	DESCRIPTION	COMMENTS
1	209/00316/00	2-Way Inlet Valve	Metric thread; Uses F380939 Valve Repair Kit
	209/00419/00	2-Way Inlet Valve	Standard thread; Uses F380939 Valve Repair Kit
2	223/00011/00	Hose Clamp	
3	223/00059/00	Water Hose	
4	223/00010/00	Hose Clamp	
5	223/00044/01	Water Hose	
6	111/00304/10	Backbridge	*55 and *235 models; Rectangular vent opening
	111/00334/20	Backbridge	*75, *90, *305 and *400 models; Rectangular vent opening
7	223/00226/00	Vent Tube	
8	209/00090/01	Inlet Valve Solenoid	
9	209/00316/02	Diaphragm	
10	202/00004/00	Washer	
11	206/00027/00	Bolt	
12	223/00044/01	Water Hose	
13	204/00201/00	Nut	
14	201/00002/00	Washer	
15	206/00099/00	Bolt	
16	223/00001/04	Prewash and Mainwash Nozzle	
17	F200164	Water Hose	Standard thread
	F200166	Water Hose	Metric thread
18	204/00007/00	Nut	
19	203/00006/00	Washer	
20	223/00102/07	Hose Vent	
21	208/00014/00	Screw	
22	201/00006/00	Washer	
23	208/00002/00	Nut	
24	111/00304/00	Backbridge	*55 and *235 models; Circular vent opening
	111/00334/10	Backbridge	*75, *90, *305 and *400 models; Circular vent opening

© Copyright, Alliance Laundry Systems LLC – DO NOT COPY or TRANSMIT

Inverter Drive - *55 and *235 Models

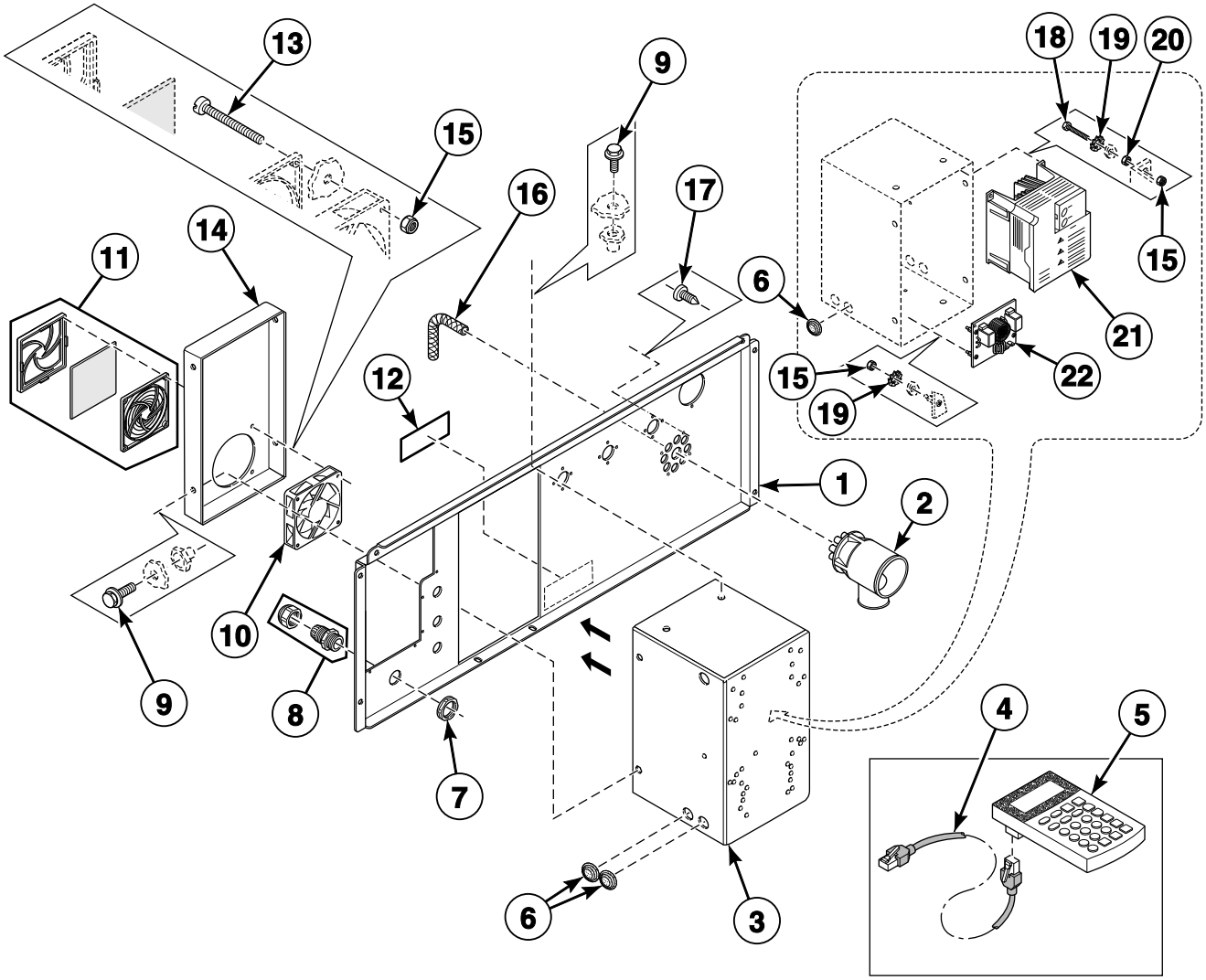

CFD424P_D0887

© Copyright, Alliance Laundry Systems LLC – DO NOT COPY or TRANSMIT

Inverter Drive - *55 and *235 Models

REF	PART NO.	DESCRIPTION	COMMENTS
1	111/00304/00	Backbridge	
2	223/00249/00	Liquid Soap Manifold	
3	111/01150/00	Inverter Drive Box	
4	227/00171/10	Parameter Unit Program Cable	
5	227/00171/00	Parameter Unit Assembly	Hand held
	F8410901	Parameter Unit Assembly	Inverter mounted; Used with 500 series inverter drives
6	223/00174/00	Grommet	
7	211/00171/00	Nut	
8	211/00182/00	Nut	
9	206/00099/00	Bolt	
10	209/00287/00	Cooling Fan	
11	209/00287/11	AC Drive Filter	Includes filter and holder
	209/00287/21	Filter	Filter only
12	B12355001	Voltage Discharge Decal	
13	207/00021/00	Screw	
14	111/01158/11	Inverter Box Cover	
15	204/00114/00	Nut	
16	223/00179/10	Pressure Hose	
17	208/00130/00	Screw	
18	206/00088/00	Bolt	
19	203/00006/00	Washer	
20	204/00007/00	Nut	
21	N/A	Inverter Drive	FR-E520 series; 1 x 230 Volt
	227/00168/00	Inverter Drive	FR-E540 series; 3 x 400 Volt
	227/00237/00	Inverter Drive	FR-D740 series; 3 x 400 Volt; Cygnus control models
	227/00229/00	Inverter Drive	FR-D720 series; 1 x 230 Volt; Cygnus control models
	F8420321	Drive	Micro-20, PS40F and Sigma control models; 700-series; 200 Volt/1 Phase; Models with 1.5 kW motor
	F8420322	Drive	Micro-20, PS40F and Sigma control models; 700-series; 400 Volt/3 Phase; Models with 1.5 kW motor
	F8420221	Inverter Kit	Micro-20, PS40F and Sigma control models; Used to convert 500-series to 700-series inverter drive; 200 Volt/1 Phase; Models with 1.5 kW motor; Includes F8420321 Drive, F8409501 Mounting Plate Assembly and F430903 Screw
	F8420222	Inverter Kit	Micro-20, PS40F and Sigma control models; Used to convert 500-series to 700-series inverter drive; 400 Volt/3 Phase; Models with 1.5 kW motor; Includes F8420322 Drive, F8409501 Mounting Plate Assembly and F430903 Screw
22	B12339401	Noise Filter	

N/A = Part no longer available

© Copyright, Alliance Laundry Systems LLC – DO NOT COPY or TRANSMIT

Inverter Drive - *75 and *305 Models

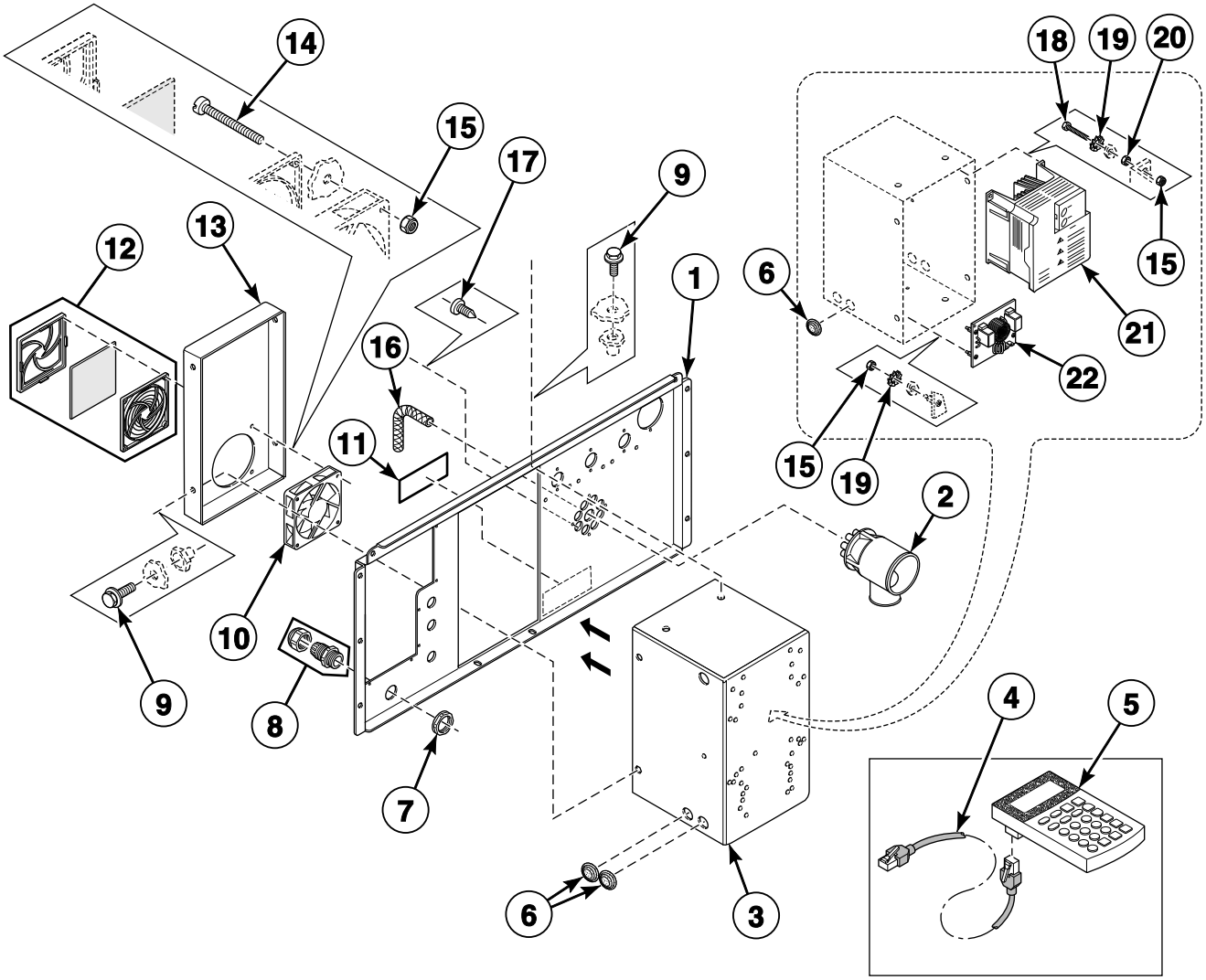

CFD425P_D0887

© Copyright, Alliance Laundry Systems LLC – DO NOT COPY or TRANSMIT

Inverter Drive - *75 and *305 Models

REF	PART NO.	DESCRIPTION	COMMENTS
1	111/00334/10	Backbridge	
2	223/00249/00	Liquid Soap Manifold	
3	111/01149/00	Inverter Drive Box	
4	227/00171/10	Parameter Unit Program Cable	
5	227/00171/00	Parameter Unit Assembly	Hand held
	F8410901	Parameter Unit Assembly	Inverter mounted; Used with 500 series inverter drives
6	223/00174/00	Grommet	
7	211/00171/00	Nut	
8	211/00182/00	Nut	
9	206/00099/00	Bolt	
10	209/00287/00	Cooling Fan	
11	B12355001	Voltage Discharge Decal	
12	209/00287/11	AC Drive Filter	Includes filter and holder
	209/00287/21	Filter	Filter only
13	111/01158/11	Inverter Box Cover	
14	207/00021/00	Screw	
15	204/00114/00	Nut	
16	223/00179/10	Pressure Hose	
17	208/00130/00	Screw	
18	206/00088/00	Bolt	
19	203/00006/00	Washer	
20	204/00007/00	Nut	
21	N/A	Inverter Drive	FR-E520 series; 1 x 230 Volt
	227/00168/00	Inverter Drive	FR-E540 series; 3 x 400 Volt
	227/00237/00	Inverter Drive	FR-D740 series; 3 x 400 Volt; Cygnus control models
	227/00229/00	Inverter Drive	FR-D720 series; 1 x 230 Volt; Cygnus control models
	F8420323	Drive	Micro-20, PS40F and Sigma control models; 700-series; 200 Volt/1 Phase; Models with 2.2 kW motor
	F8420324	Drive	Micro-20, PS40F and Sigma control models; 700-series; 400 Volt/3 Phase; Models with 2.2 kW motor
	F8420223	Inverter Kit	Micro-20, PS40F and Sigma control models; Used to convert 500-series to 700-series inverter drive; 200 Volt/1 Phase; Models with 2.2 kW motor; Includes F8420323 Drive, F8409501 Mounting Plate Assembly and F430903 Screw
	F8420224	Inverter Kit	Micro-20, PS40F and Sigma control models; Used to convert 500-series to 700-series inverter drive; 400 Volt/3 Phase; Models with 2.2 kW motor; Includes F8420324 Drive, F8409501 Mounting Plate Assembly and F430903 Screw
22	B12339401	Noise Filter	

N/A = Part no longer available

© Copyright, Alliance Laundry Systems LLC – DO NOT COPY or TRANSMIT

Inverter Drive - *90 and *400 Models

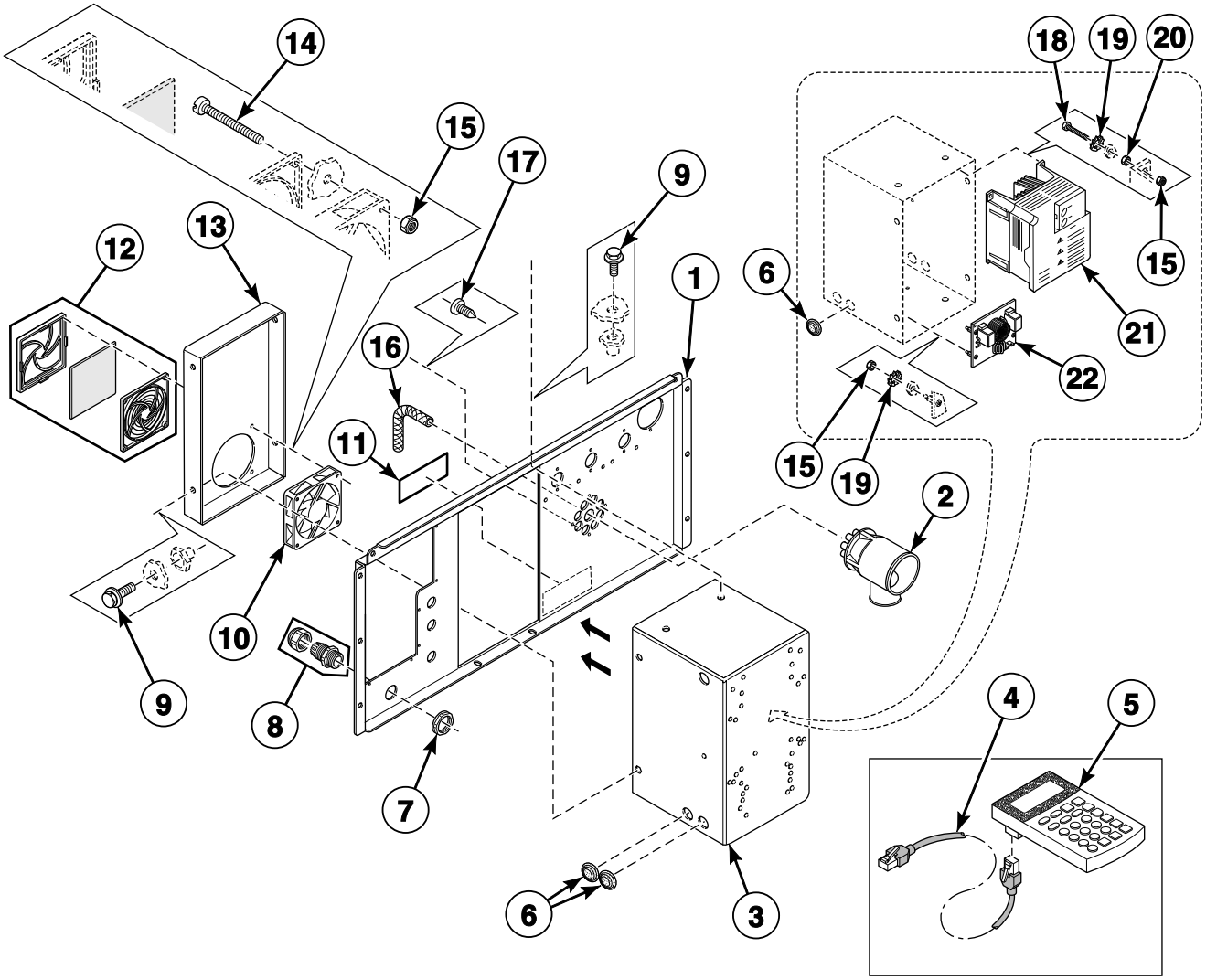

CFD425P_D0887

© Copyright, Alliance Laundry Systems LLC – DO NOT COPY or TRANSMIT

Inverter Drive - *90 and *400 Models

REF	PART NO.	DESCRIPTION	COMMENTS
1	111/00334/10	Backbridge	
2	223/00249/00	Liquid Soap Manifold	
3	111/01149/00	Inverter Drive Box	
4	227/00171/10	Parameter Unit Program Cable	
5	227/00171/00	Parameter Unit Assembly	Hand held
	F8410901	Parameter Unit Assembly	Inverter mounted; Used with 500 series inverter drives
6	223/00174/00	Grommet	
7	211/00171/00	Nut	
8	211/00182/00	Nut	
9	206/00099/00	Bolt	
10	209/00287/00	Cooling Fan	
11	B12355001	Voltage Discharge Decal	
12	209/00287/11	AC Drive Filter	Includes filter and holder
	209/00287/21	Filter	Filter only
13	111/01158/11	Inverter Box Cover	
14	207/00021/00	Screw	
15	204/00114/00	Nut	
16	223/00179/10	Pressure Hose	
17	208/00130/00	Screw	
18	206/00088/00	Bolt	
19	203/00006/00	Washer	
20	204/00007/00	Nut	
21	N/A	Inverter	FR-E520 series; 1 x 230 Volt
	227/00169/00	Inverter	FR-E540 series; 3 x 400 Volt
	227/00238/00	Inverter	FR-D740 series; 3 x 400 Volt; Cygnus control models
	227/00230/00	Inverter	FR-D720 series; 1 x 230 Volt; Cygnus control models
	F8420325	Drive	Micro-20, PS40F and Sigma control models; 700-series; 200 Volt/1 Phase; Models with 3.0 kW motor
	F8420326	Drive	Micro-20, PS40F and Sigma control models; 700-series; 400 Volt/3 Phase; Models with 3.0 kW motor
	F8420225	Inverter Kit	Micro-20, PS40F and Sigma control models; Used to convert 500-series to 700-series inverter drive; 200 Volt/1 Phase; Models with 3.0 kW motor; Includes F8420325 Drive
	F8420226	Inverter Kit	Micro-20, PS40F and Sigma control models; Used to convert 500-series to 700-series inverter drive; 400 Volt/3 Phase; Models with 3.0 kW motor; Includes F8420326 Drive, F8409501 Mounting Plate Assembly and F430903 Screw
22	B12339401	Noise Filter	

N/A = Part no longer available

© Copyright, Alliance Laundry Systems LLC – DO NOT COPY or TRANSMIT

Main Switch and Noise Filter

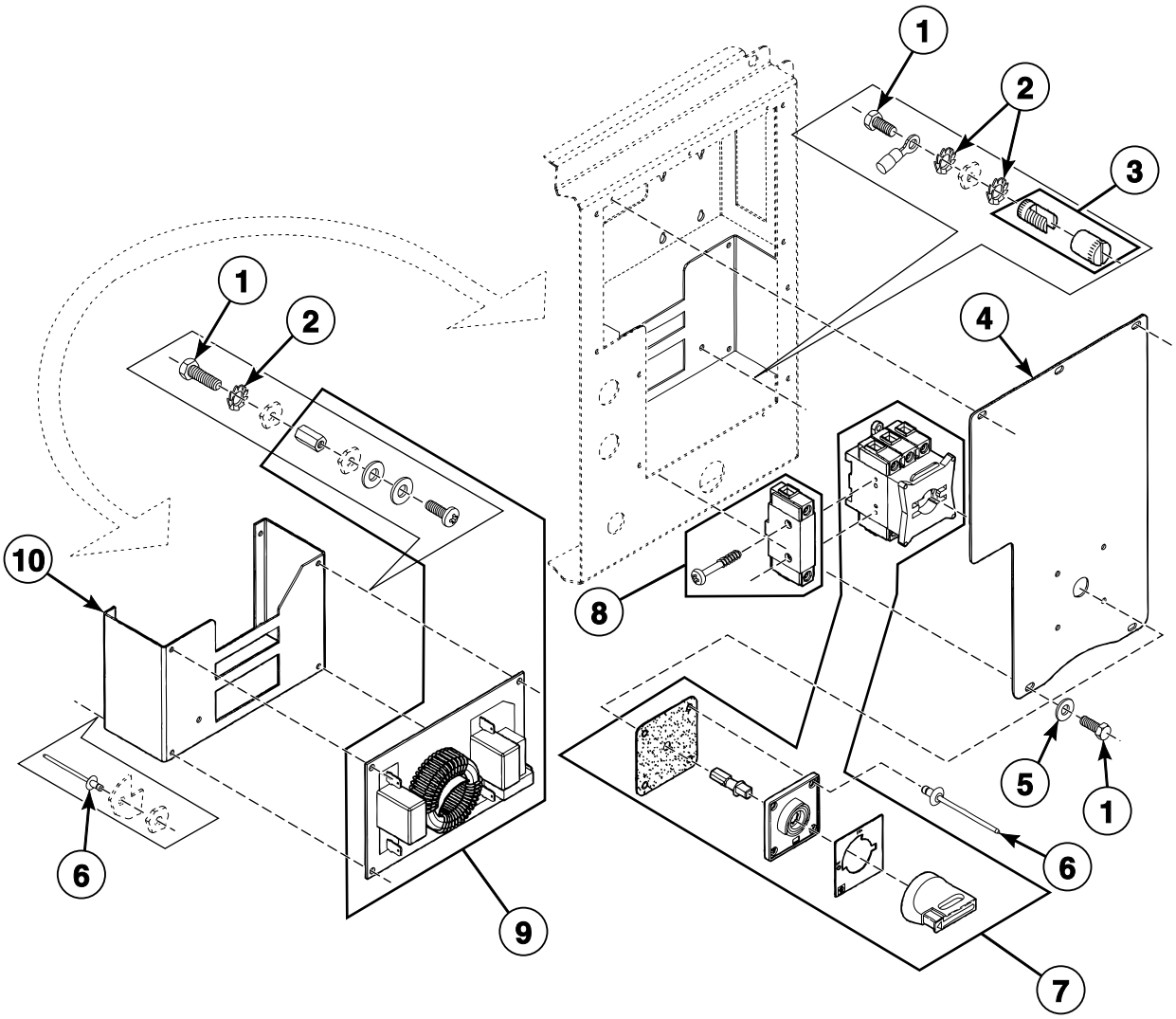

BE000799P_D0887

© Copyright, Alliance Laundry Systems LLC – DO NOT COPY or TRANSMIT

Main Switch and Noise Filter

REF	PART NO.	DESCRIPTION	COMMENTS
1	206/00027/00	Bolt	
2	203/00006/00	Washer	
3	209/00006/01	Ground Terminal	
4	111/01834/00	Main Switch Cover	
5	202/00004/00	Washer	
6	208/00017/00	Rivet	
7	209/00529/00	Main Switch	25A
	209/00672/00	Main Switch	40A
	209/00526/00	Main Switch	80A
8	209/00530/00	Terminal Block	25A
	209/00527/00	Terminal Block	63/80A
9	227/00177/00	Filter	16A1
	227/00242/00	Noise Filter	16A3
	227/00179/00	Filter	40A3
	227/00180/00	Filter	45A1
	227/00183/00	Filter	53A3
10	111/01837/01	Filter Bracket	

© Copyright, Alliance Laundry Systems LLC – DO NOT COPY or TRANSMIT

Central Operating Panel, Network Connection and Soap Injection Printboards

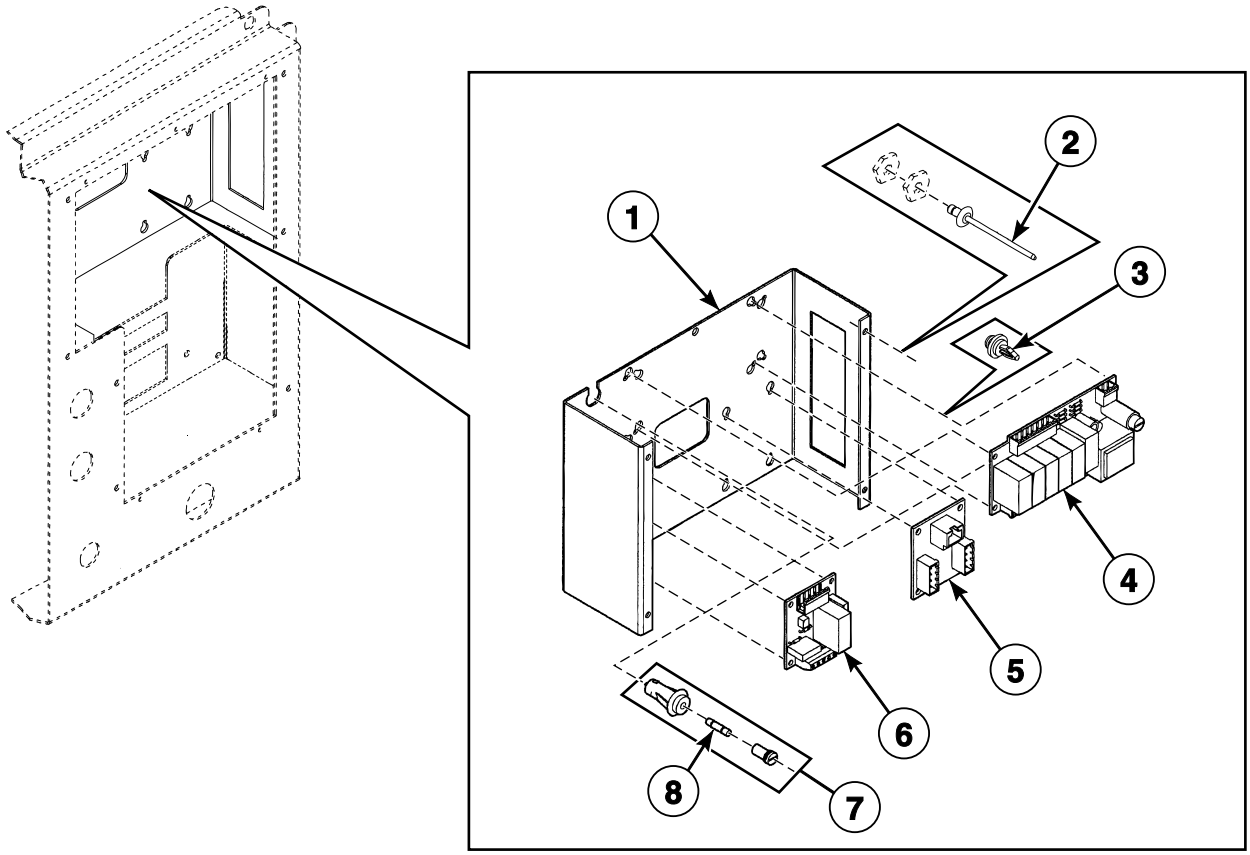

BE000800P_D0887

© Copyright, Alliance Laundry Systems LLC – DO NOT COPY or TRANSMIT

Central Operating Panel, Network Connection and Soap Injection Printboards

REF	PART NO.	DESCRIPTION	COMMENTS
1	111/01838/10	Printboard Support	
2	208/00017/00	Rivet	
3	211/00146/00	Standoff	
4	209/00218/13	Soap Injection PCB with Fuse	
5	209/00540/01	Network Connection Printboard	
6	209/00438/50	Central Control Board	
7	209/00202/00	Fuse Holder	Includes item 8
	209/00202/01	Fuse Holder	
8	209/00468/00	Fuse	3 Amp

© Copyright, Alliance Laundry Systems LLC – DO NOT COPY or TRANSMIT

Relay, Network Connection and Main Printboards - Cygnus Models

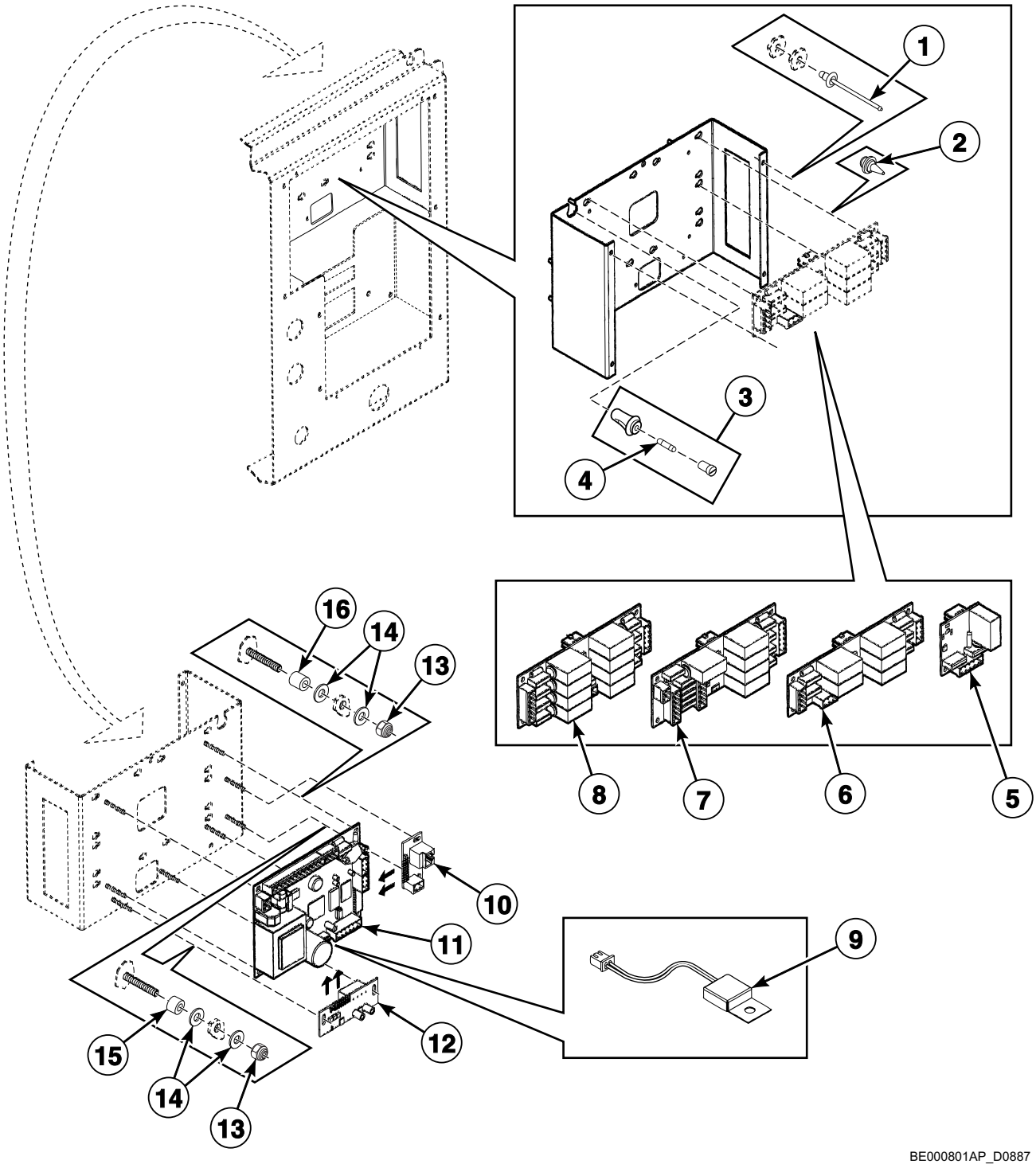

© Copyright, Alliance Laundry Systems LLC – DO NOT COPY or TRANSMIT

Relay, Network Connection and Main Printboards - Cygnus Models

REF	PART NO.	DESCRIPTION	COMMENTS
1	208/00017/00	Rivet	
2	211/00146/00	Standoff	
3	209/00202/00	Fuse Holder	
	209/00202/01	Fuse Holder	Includes item 4
4	209/00468/00	Fuse	3 Amp
5	209/02016/00	Relay PC-Board	1-1
6	209/02005/00	Detergent PC-Board	1-5
7	209/02014/00	Relay PC-Board	5-5
8	209/02008/00	Detergent PC-Board	1-8
9	209/02020/00	ID Chip	
10	209/02006/00	Inverter PC-Board	
11	209/02025/00	Microprocessor	
12	209/02007/00	Network Connection Printboard	
13	204/00116/00	Nut	
14	223/00123/00	Washer	
15	211/00128/00	Printboard Separator	
16	211/00122/00	Standoff	

© Copyright, Alliance Laundry Systems LLC – DO NOT COPY or TRANSMIT

Electrical Component Mounting Plate - *55, *75, *235 and *305 Models (Drawing 1 of 2)

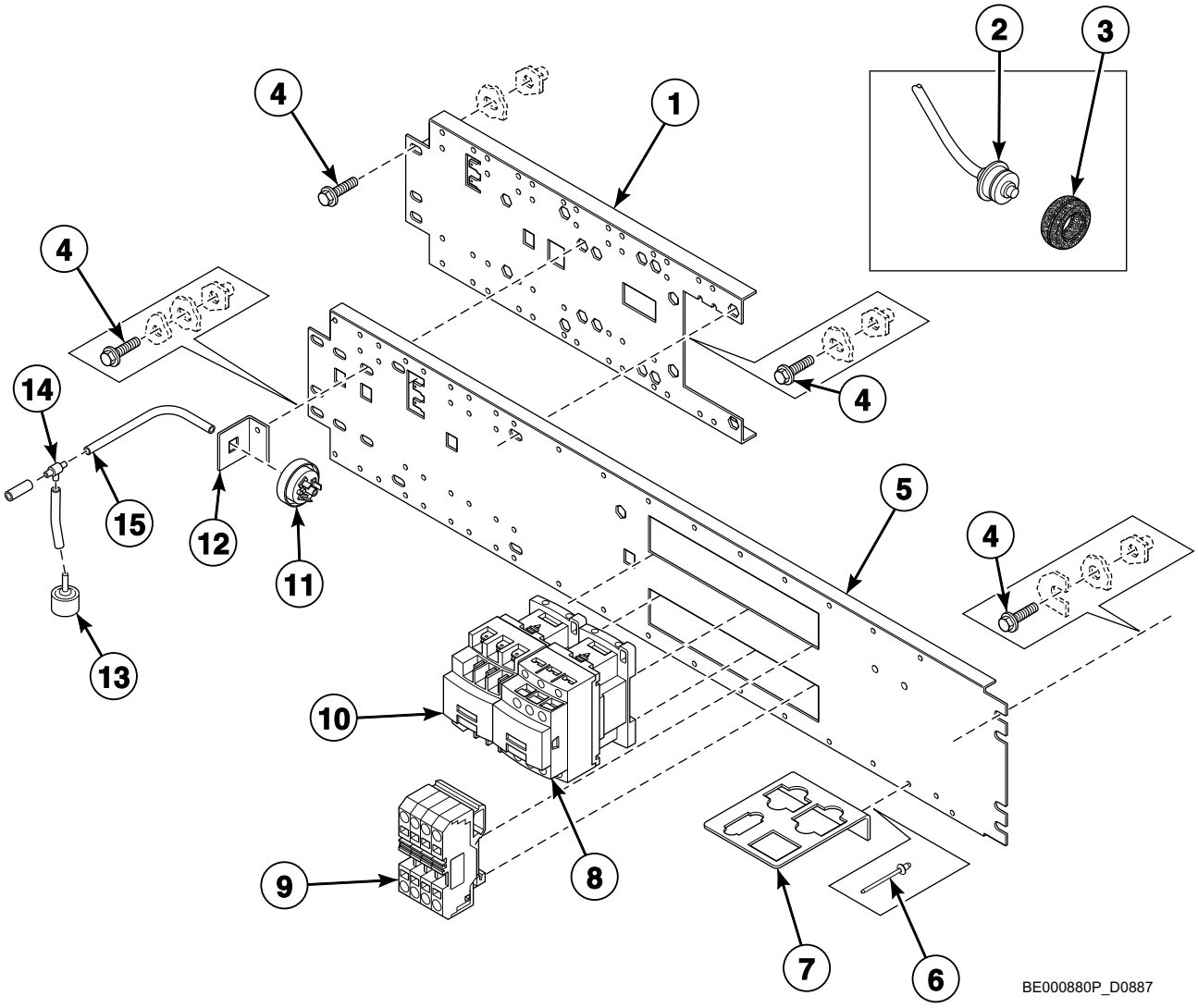

© Copyright, Alliance Laundry Systems LLC – DO NOT COPY or TRANSMIT

Electrical Component Mounting Plate - *55, *75, *235 and *305 Models (Drawing 1 of 2)

REF	PART NO.	DESCRIPTION	COMMENTS
1	111/10003/40	Electrical Component Mounting Plate	
2	210/01304/16	Thermostat	Micro-20, Sigma and PS40F control models
	210/01064/16	Thermostat	Cygnus control models
3	225/10004/00	Thermostat Seal	
4	206/00099/00	Bolt	
5	111/10004/00	Electrical Component Plate	
6	208/00017/00	Rivet	
7	111/10003/10	Support Connector	
8	209/06148/02	Heating Contactor	
9	209/00641/04	Heating Contactor	
10	209/00619/00	Overload Contactor	2 pole; 6 mm; Gray; 2006-1201
	209/00620/00	Overload Contactor	2 pole; 6 mm; Blue; 2006-1204
	209/00621/00	Overload Contactor	3 pole; 6 mm; Blue; 2006-1304
	209/00622/00	Overload Contactor	3 pole; 6 mm; Gray; 2006-1301
	209/00623/00	Overload Contactor	2 pole; 10 mm; Gray; 2010-1201
	209/00624/00	Overload Contactor	2 pole; 10 mm; Blue; 2010-1204
	209/00625/00	Overload Contactor	3 pole; 10 mm; Gray; 2010-1301
	209/00619/01	Connection Clamp	2 pole; 6 mm; Final plate
	209/00622/01	Connection Clamp	3 pole; 6 mm; Final plate
	209/00625/01	Connection Clamp	3 pole; 10 mm; Final plate
11	209/00007/50	Pressure Switch	
12	111/10004/10	Electrical Component Plate	
13	223/00035/02	Pressure Switch Cap	
14	223/00173/10	Pressure Switch Hose Tee	
15	223/00333/00	Pressure Hose	

© Copyright, Alliance Laundry Systems LLC – DO NOT COPY or TRANSMIT

Electrical Component Mounting Plate - *55, *75, *235 and *305 Models (Drawing 2 of 2)

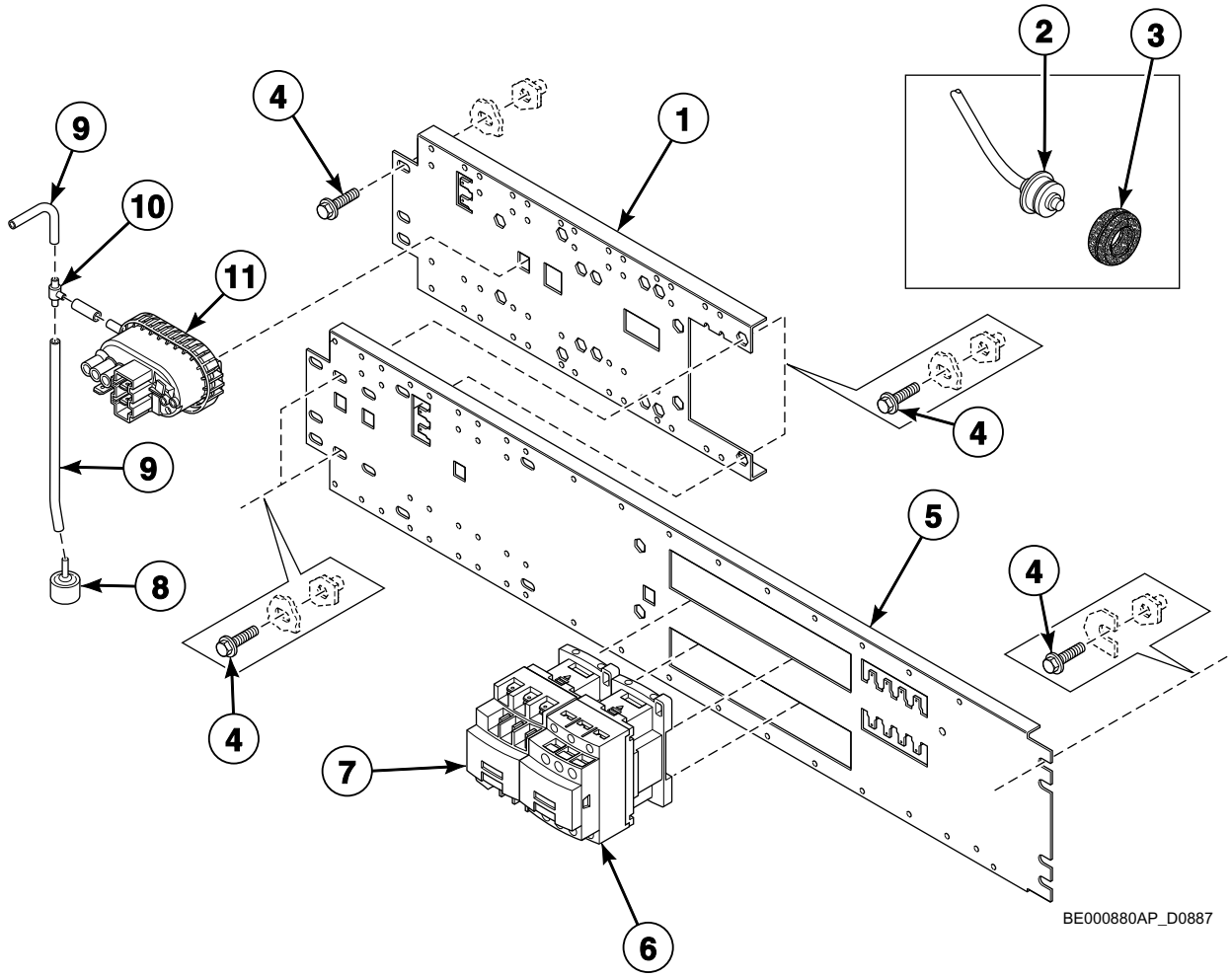

© Copyright, Alliance Laundry Systems LLC – DO NOT COPY or TRANSMIT

Electrical Component Mounting Plate - *55, *75, *235 and *305 Models (Drawing 2 of 2)

REF	PART NO.	DESCRIPTION	COMMENTS
1	111/10003/40	Electrical Component Mounting Plate	
2	210/01304/16	Thermostat	Micro-20, Sigma and PS40F control models
	210/01064/16	Thermostat	Cygnus control models
3	225/10004/00	Thermostat Seal	
4	206/00099/00	Bolt	
5	111/10005/00	Electrical Component Bridge	
6	209/06148/02	Heating Contactor	
7	209/00641/04	Heating Contactor	
8	223/00035/02	Pressure Switch Cap	
9	223/00333/00	Pressure Hose	
10	223/00173/10	Pressure Switch Hose Tee	
11	209/00027/10	Pressure Switch	

© Copyright, Alliance Laundry Systems LLC – DO NOT COPY or TRANSMIT

Electrical Component Mounting Plate - *90 and *400 Models

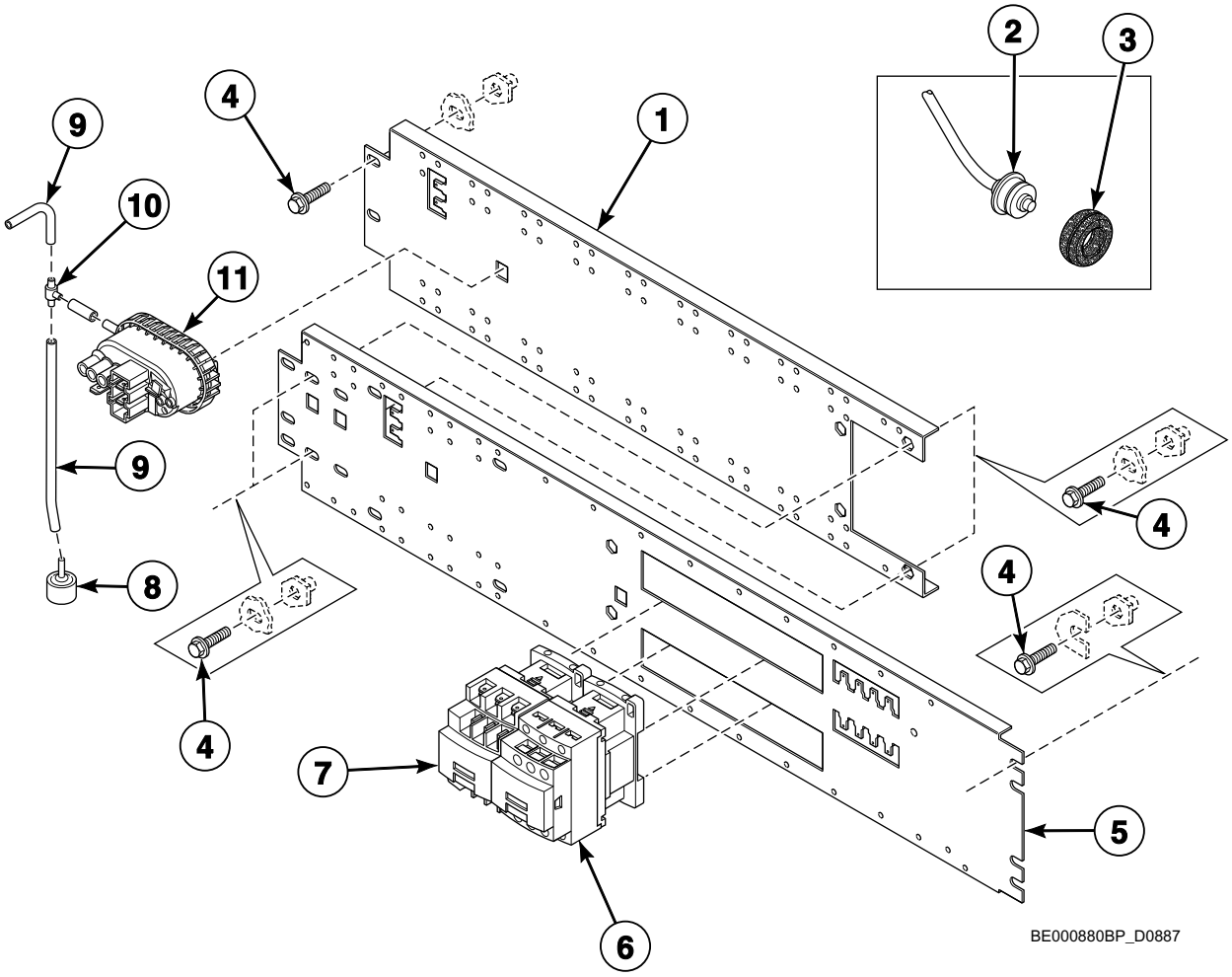

© Copyright, Alliance Laundry Systems LLC – DO NOT COPY or TRANSMIT

Electrical Component Mounting Plate - *90 and *400 Models

REF	PART NO.	DESCRIPTION	COMMENTS
1	111/10004/20	Electrical Component Bridge	
2	210/01304/16	Thermostat	Micro-20, Sigma and PS40F control models
	210/01064/16	Thermostat	Cygnus control models
3	225/10004/00	Thermostat Seal	
4	206/00099/00	Bolt	
5	111/10005/00	Electrical Component Bridge	
6	209/06148/02	Heating Contactor	
7	209/00641/04	Heating Contactor	
8	223/00035/02	Pressure Switch Cap	
9	223/00333/00	Pressure Hose	
10	223/00173/10	Pressure Switch Hose Tee	
11	209/00027/10	Pressure Switch	

© Copyright, Alliance Laundry Systems LLC – DO NOT COPY or TRANSMIT

Supply Dispenser - *55 and *235 Models with Circular Ventilation Opening

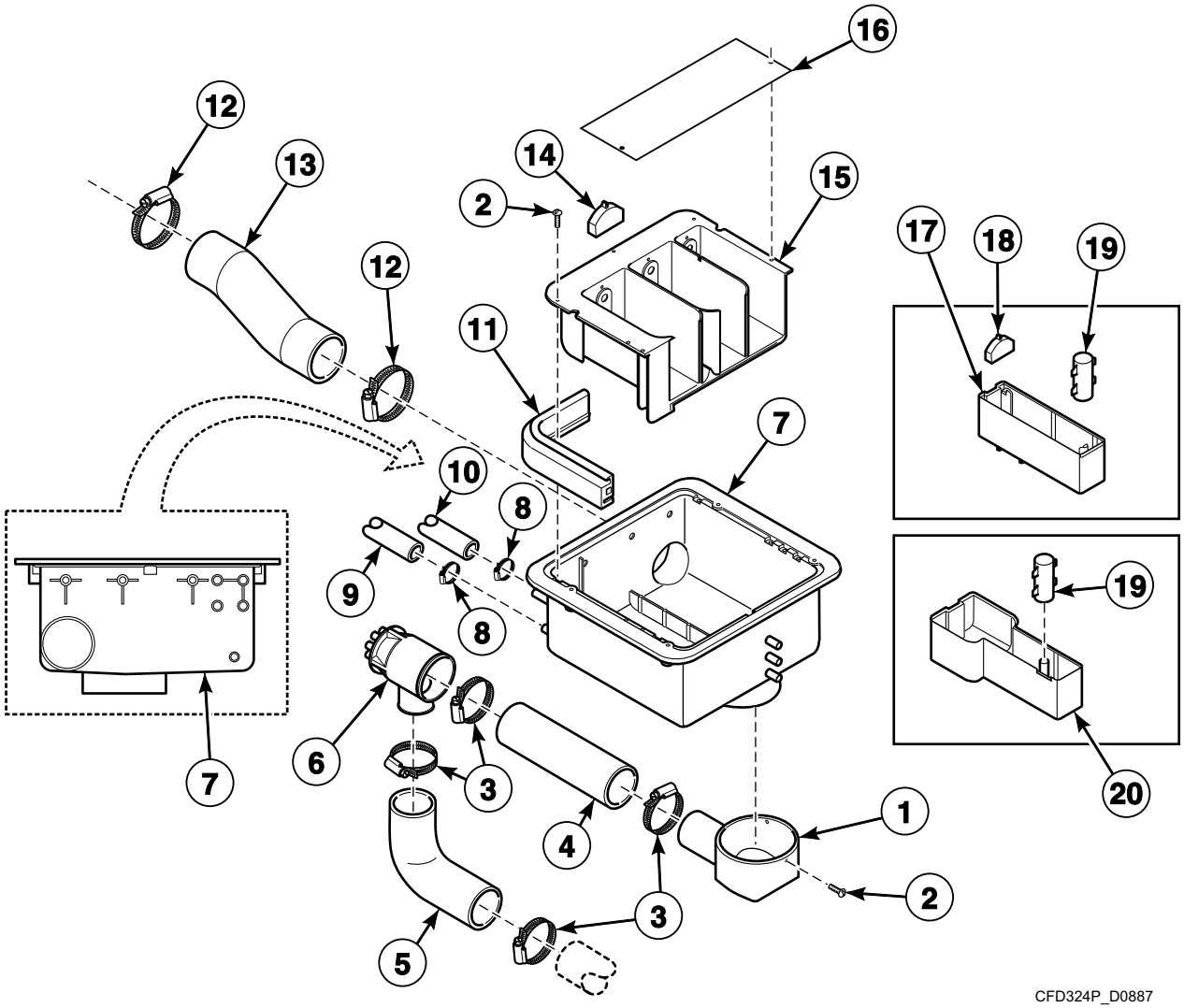

© Copyright, Alliance Laundry Systems LLC – DO NOT COPY or TRANSMIT

Supply Dispenser - *55 and *235 Models with Circular Ventilation Opening

REF	PART NO.	DESCRIPTION	COMMENTS
1	223/00196/00	Dispenser Drain Funnel	
2	B12350903	Screw	
3	223/00071/00	Hose Clamp	
4	223/00263/00	Siphon Break Dispenser Hose	
5	B12322403	Hose	
6	223/00249/00	Liquid Soap Manifold	
7	223/00102/40	Exterior Box	
	223/00102/60	Dispenser Assembly	
8	223/00010/00	Hose Clamp	
9	223/00044/01	Water Hose	
10	223/00059/00	Water Hose	
11	223/00109/00	Soap Dispenser Gasket	
12	223/00014/00	Hose Clamp	
13	223/00107/06	Vent Hose	
14	223/00102/06	Soap Spray Nozzle	
15	223/00102/30	Soap Dispenser Assembly	
16	123/00107/00	Anti-Splash Plate	Sigma control models
	123/00103/06	Soap Box Assembly Plate	All other models
17	223/00102/03	Rinse Insert	
18	223/00102/05	Softener Spray Nozzle	
19	223/00102/04	Soap Dispenser Rinse Siphon	
20	223/00102/08	Liquid Soap Dispenser Insert	

© Copyright, Alliance Laundry Systems LLC – DO NOT COPY or TRANSMIT

Supply Dispenser - *75, *90, *305 and *400 Models with Circular Ventilation Opening

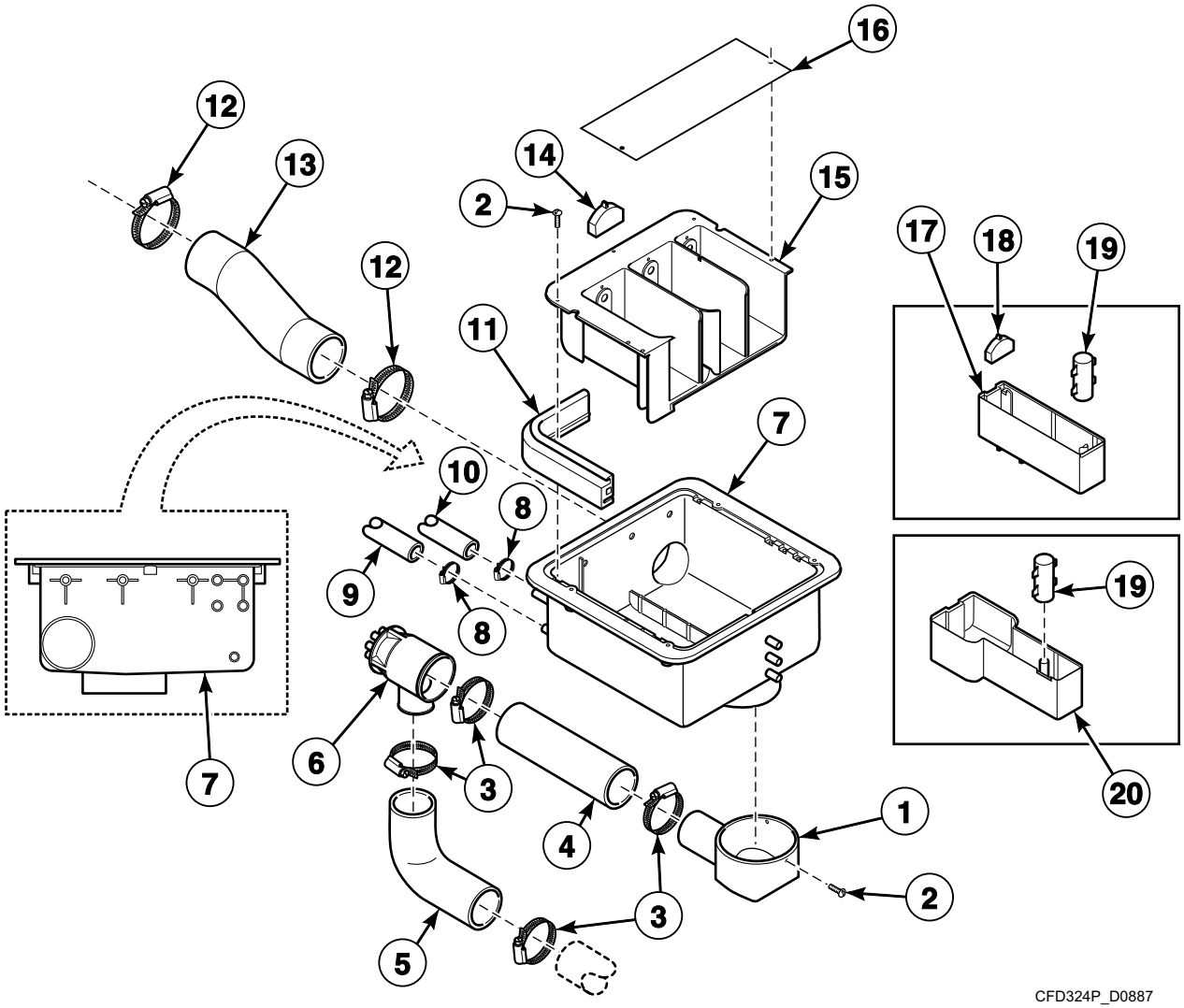

© Copyright, Alliance Laundry Systems LLC – DO NOT COPY or TRANSMIT

Supply Dispenser - *75, *90, *305 and *400 Models with Circular Ventilation Opening

REF	PART NO.	DESCRIPTION	COMMENTS
1	223/00196/00	Dispenser Drain Funnel	
2	B12350903	Screw	
3	223/00071/00	Hose Clamp	
4	223/00264/00	Siphon Break Dispenser Hose	
5	B12322404	Siphon Break Hose	
6	223/00249/00	Liquid Soap Manifold	
7	223/00102/40	Exterior Box	
	223/00102/60	Dispenser Assembly	
8	223/00010/00	Hose Clamp	
9	223/00044/01	Water Hose	
10	223/00059/00	Water Hose	
11	223/00109/00	Soap Dispenser Gasket	
12	223/00014/00	Hose Clamp	
13	223/00388/00	Vent Hose	
14	223/00102/06	Soap Spray Nozzle	
15	223/00102/30	Soap Dispenser Assembly	
16	123/00107/00	Anti-Splash Plate	Sigma control models
	123/00103/06	Soap Box Assembly Plate	All other models
17	223/00102/03	Rinse Insert	
18	223/00102/05	Softener Spray Nozzle	
19	223/00102/04	Soap Dispenser Rinse Siphon	
20	223/00102/08	Liquid Soap Dispenser Insert	

© Copyright, Alliance Laundry Systems LLC – DO NOT COPY or TRANSMIT

Supply Dispenser with Rectangular Ventilation Opening

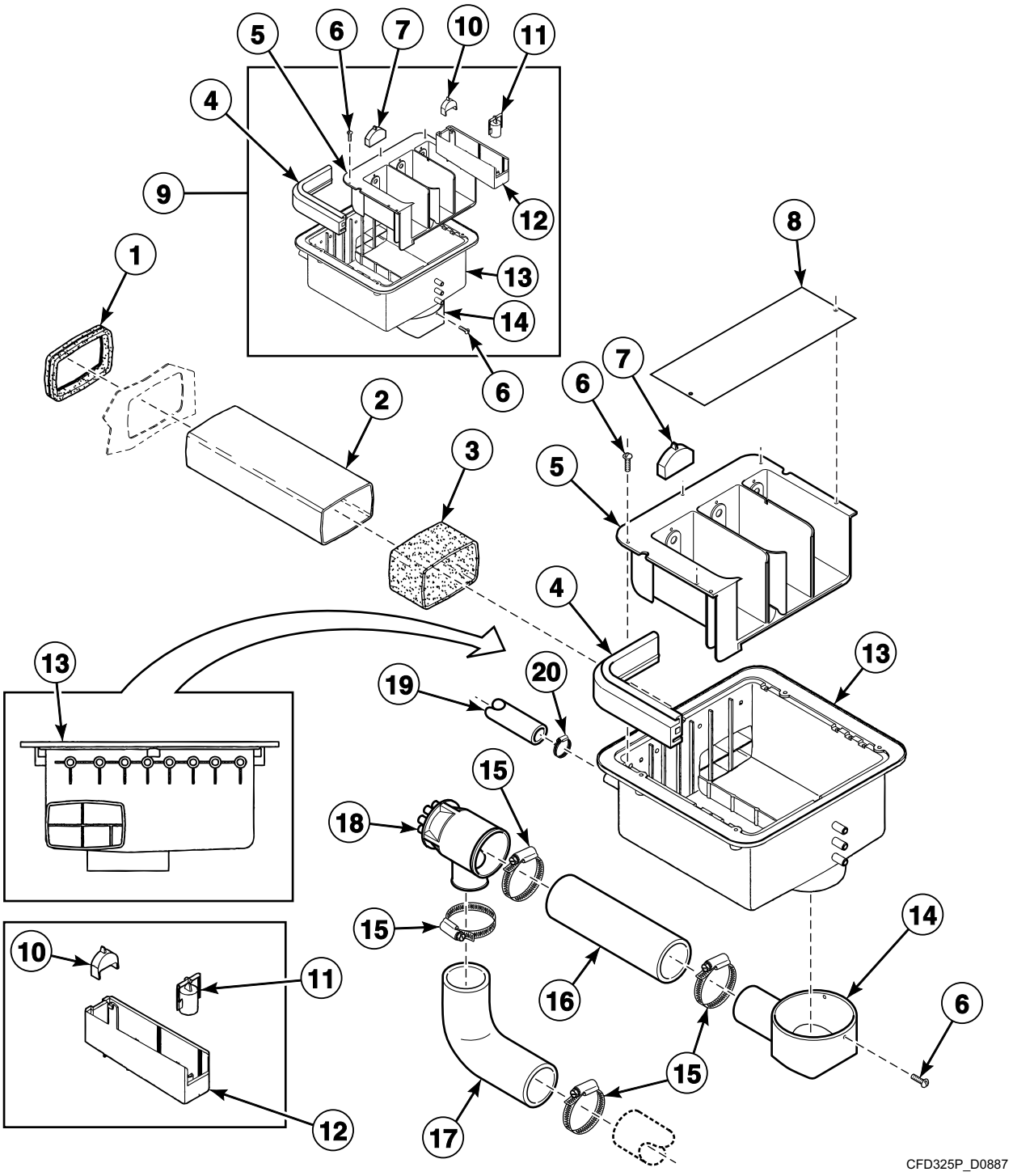

© Copyright, Alliance Laundry Systems LLC – DO NOT COPY or TRANSMIT

Supply Dispenser with Rectangular Ventilation Opening

REF	PART NO.	DESCRIPTION	COMMENTS
1	223/00226/00	Vent Tube	
2	223/00229/00	Vent Tube	
3	223/00245/00	Shrink Fit	
4	223/00109/00	Soap Dispenser Gasket	
5	223/00222/60	Outer and Inner Box Kit	
6	B12350903	Screw	
7	223/00102/06	Soap Spray Nozzle	
8	123/00107/00	Anti-Splash Plate	Sigma control models
	123/00103/06	Soap Box Assembly Plate	All other models
9	223/00240/00	Soap Dispenser	
10	223/00222/03	Softener Spray Nozzle	
11	223/00222/04	Siphon Break	
12	223/00222/05	Rinsing Box	
13	223/00222/01	Exterior Box	
14	223/00196/00	Dispenser Drain Funnel	
15	223/00071/00	Hose Clamp	
16	223/00264/00	Siphon Break Dispenser Hose	*75, *90, *235 and *400 models
	223/00263/00	Siphon Break Dispenser Hose	*55 and *235 models
17	B12322404	Siphon Break Hose	*75, *90, *235 and *400 models
	B12322403	Hose	*55 and *235 models
18	223/00249/00	Liquid Soap Manifold	
19	223/00044/00	Water Hose	
20	223/00010/00	Hose Clamp	

© Copyright, Alliance Laundry Systems LLC – DO NOT COPY or TRANSMIT

Steam and Electric Heating Options - *55 and *235 Models

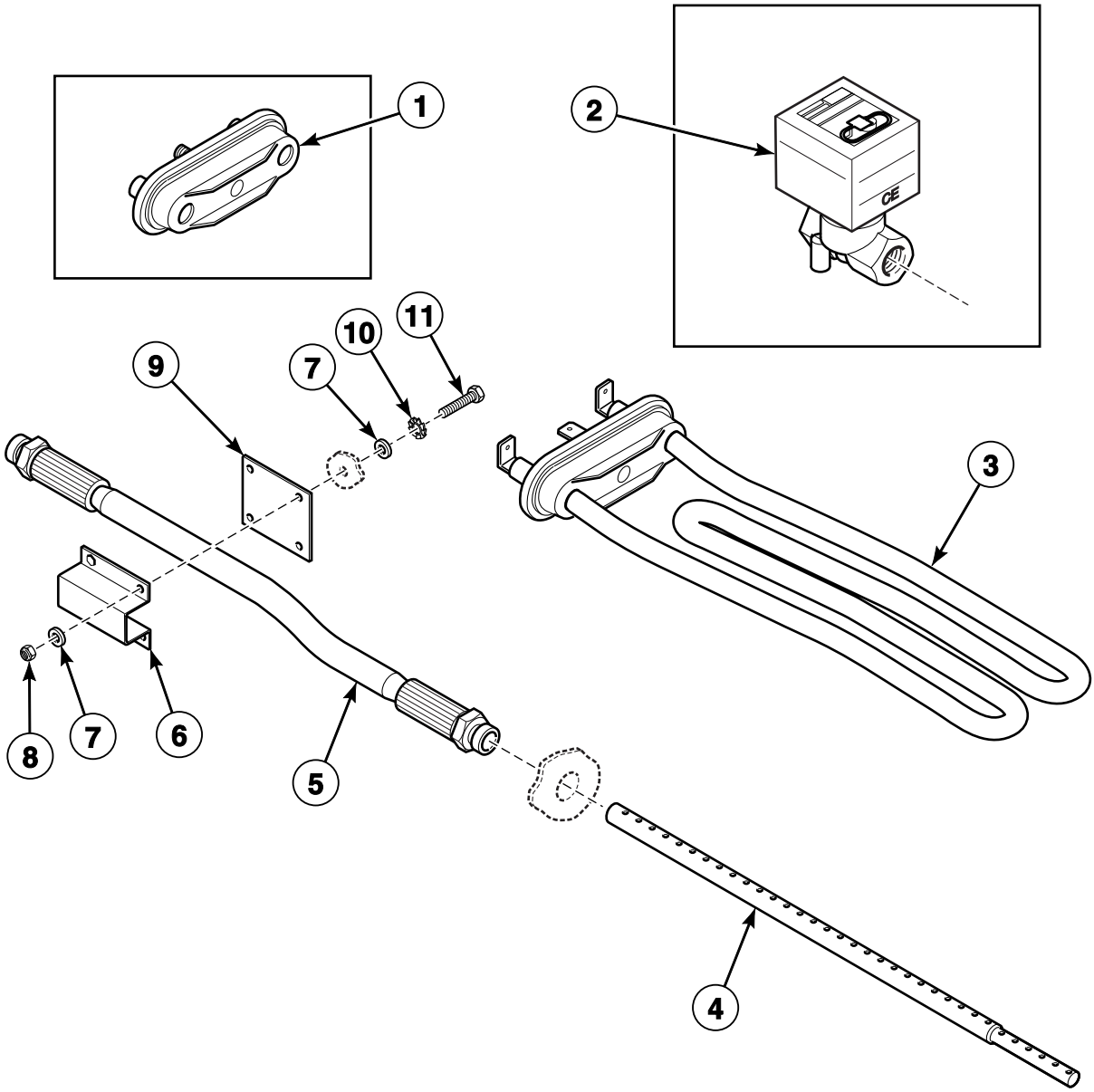

CFD426P_D0887

© Copyright, Alliance Laundry Systems LLC – DO NOT COPY or TRANSMIT

Steam and Electric Heating Options - *55 and *235 Models

REF	PART NO.	DESCRIPTION	COMMENTS
	922P3	Steam Heat Kit	
1	209/00196/00	Heating Element Plug	
2	209/00477/00	Steam Valve	
3	209/00581/10	Heating Element	4000W; 380 Volt
	209/00562/20	Heating Element	3000W; 220/240 Volt
	209/00563/20	Heating Element	2000W; 220/240 Volt
	209/00564/20	Heating Element	1400W; 220/240 Volt
4	217/00061/00	Steam Injector	
5	217/00034/00	Steam Hose	
6	111/00155/00	Steam Bracket	
7	202/00002/00	Washer	
8	204/00004/00	Nut	
9	111/00155/10	Bracket Support	
10	203/00003/00	Washer	
11	206/00035/00	Bolt	

© Copyright, Alliance Laundry Systems LLC – DO NOT COPY or TRANSMIT

Steam and Electric Heating Options - *75, *90, *305 and *400

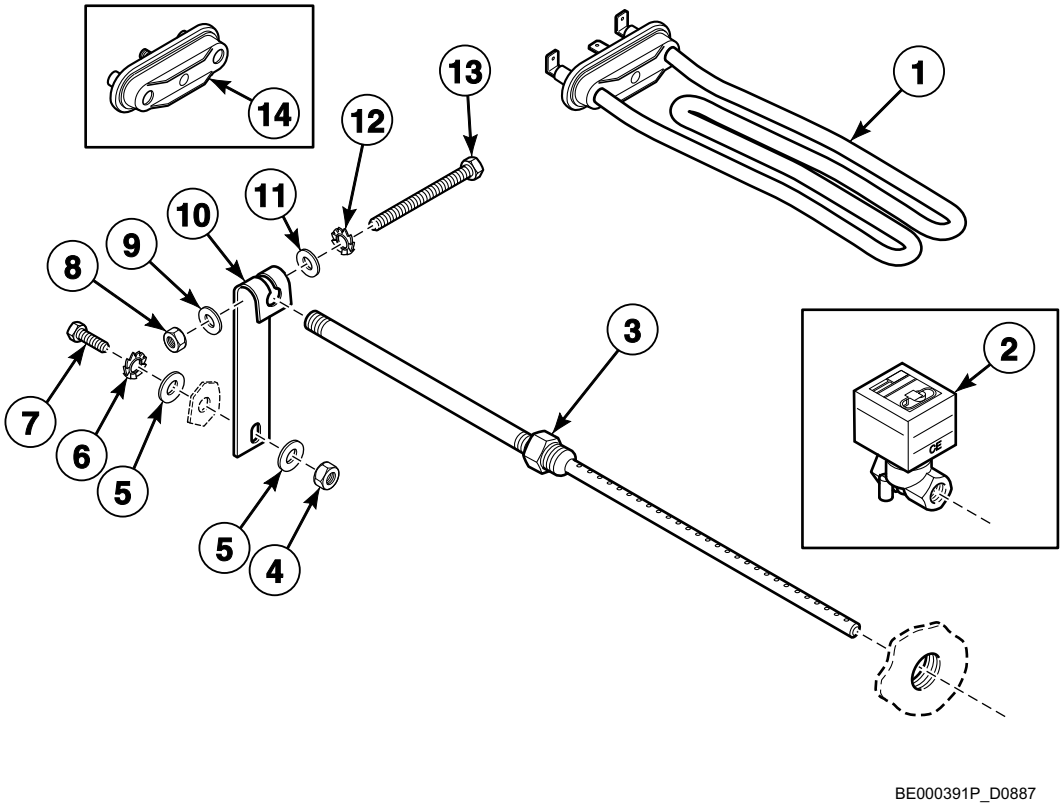

© Copyright, Alliance Laundry Systems LLC – DO NOT COPY or TRANSMIT

Steam and Electric Heating Options - *75, *90, *305 and *400

REF	PART NO.	DESCRIPTION	COMMENTS
	923P3	Steam Heat Kit	
1	209/00581/10	Heating Element	4000W; 380 Volt
	209/00562/20	Heating Element	3000W; 220/240 Volt
	209/00563/20	Heating Element	2000W; 220/240 Volt
	209/00564/20	Heating Element	1400W; 220/240 Volt
2	209/00476/00	Steam Valve	
3	119/00089/00	Steam Injector	
4	204/00005/00	Nut	
5	201/00007/00	Washer	
6	203/00004/00	Washer	
7	206/00013/00	Bolt	
8	204/00004/00	Nut	
9	202/00002/00	Washer	
10	113/00028/00	Steam Injector Bracket	
11	202/00002/00	Washer	
12	203/00003/00	Washer	
13	206/00035/00	Bolt	

© Copyright, Alliance Laundry Systems LLC – DO NOT COPY or TRANSMIT

Soap Pumps

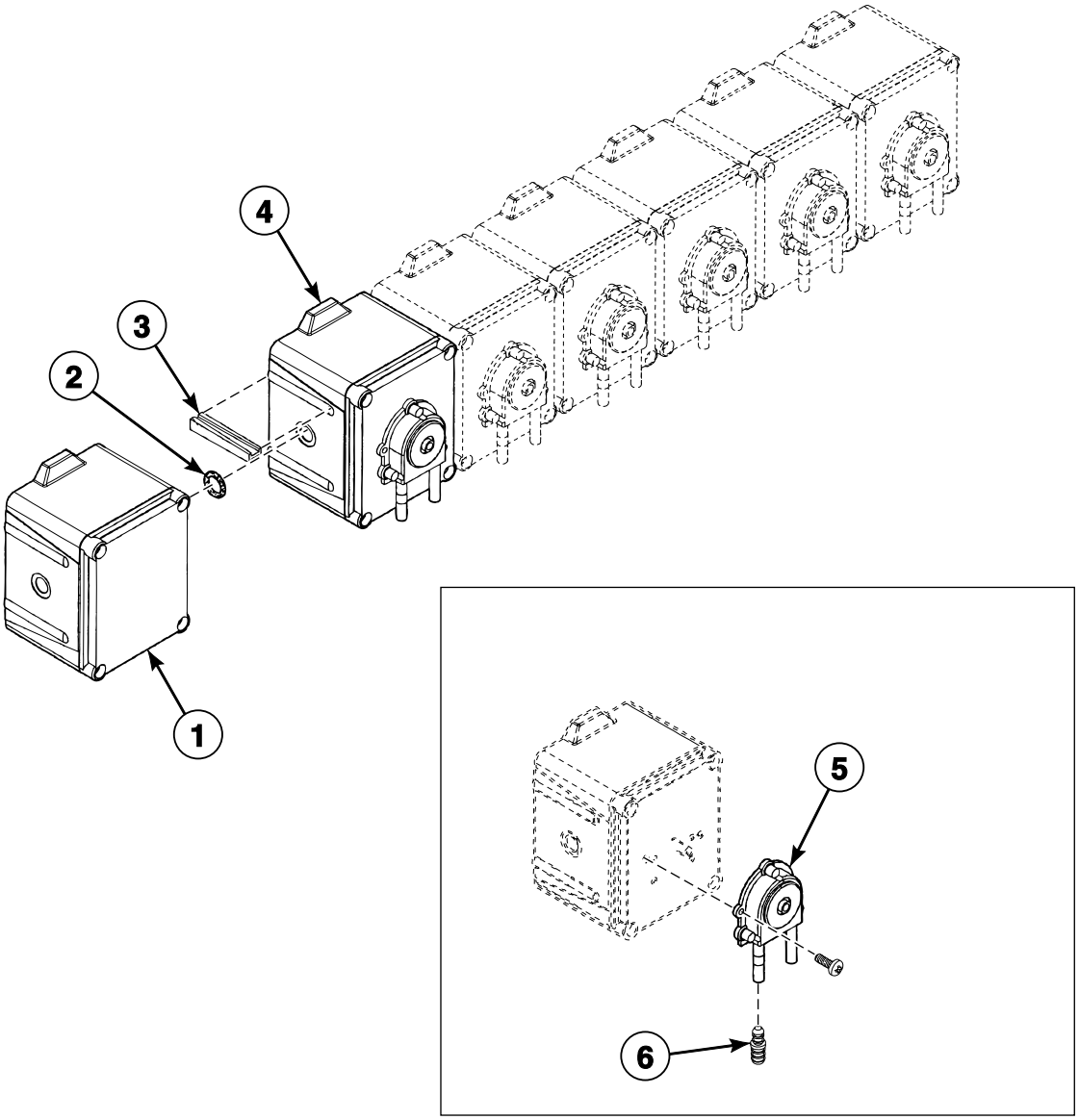

BE000527AP_D0887

© Copyright, Alliance Laundry Systems LLC – DO NOT COPY or TRANSMIT

Soap Pumps

REF	PART NO.	DESCRIPTION	COMMENTS
1	209/00554/01	Soap Pump Assembly	1 pump and 1 feeding pump
	209/00554/02	Soap Pump Assembly	2 pumps and 1 feeding pump
	209/00554/03	Soap Pump Assembly	3 pumps and 1 feeding pump
	209/00554/04	Soap Pump Assembly	4 pumps and 1 feeding pump
	209/00554/05	Soap Pump Assembly	5 pumps and 1 feeding pump
	209/00554/06	Soap Pump Assembly	6 pumps and 1 feeding pump
	209/00554/51	Feeding Liquid Soap Dosing Pump	
2	209/00554/52	Liquid Soap Dosing Pump O-Ring	
3	209/00554/53	Liquid Soap Dosing Pump Connection Piece	
4	209/00554/50	Pump	
5	209/00554/98	Hose	
6	209/00554/99	Hose Connector	

© Copyright, Alliance Laundry Systems LLC – DO NOT COPY or TRANSMIT

Notes

© Copyright, Alliance Laundry Systems LLC – DO NOT COPY or TRANSMIT

Parts Index

A

AC Drive Filter
209/00287/11 ..... 77, 79, 81

Anti-Splash Plate
123/00107/00 ..... 95, 97, 99

B

Back Panel
111/00302/00 73
111/00335/00 73

Backbridge
111/00304/00 ..... 67, 71, 75, 77
111/00304/10 75
111/00334/10 ..... 69, 75, 79, 81
111/00334/20 75

Backplate
111/01002/00 ..... 63, 65

Ball Bearing
212/00004/00 ..... 15, 17, 19
212/00024/00 15
212/00024/01 17

Basket
B12380901 ..... 21, 25
B12381001 ..... 21, 25

Basket Kit25
B12543201 21

Bearing
F100134 17

Bearing and Seal Kit
3884P 17

Bearing Cover
112/00003/00 19

Bearing Housing
212/00103/01 19

Bearing Housing Assembly
212/00103/00 19
212/00104/00 15
212/00104/01 17
212/10104/00 15

Bearing Housing Plate
113/00017/01 ..... 15, 17
113/00017/02 ..... 15, 17
113/00018/01 19
113/00018/02 19

Bearing Replacement Kit
891P3 15
892P3 19

Bearing Replacement Tool Kit
381P3 17
382P3 ..... 15, 19

Bearing Spacer
232/00020/00 23

Belt
226/00134/00 ..... 33, 35
226/00139/00 ..... 21, 23, 29, 31

Bolt
205/00102/00 ..... 15, 17
205/00103/00 39
205/00104/00 ..... 15, 17, 19, 41
205/00105/00 ..... 67, 69, 71
205/00106/00 ..... 67, 69, 71
205/00115/00 39
206/00004/00 ..... 21, 23
206/00005/00 ..... 33, 35
206/00009/00 31
206/00010/00 19
206/00013/00 103
206/00016/00 73
206/00027/00 ..... 75, 83
206/00029/00 ..... 25, 27
206/00032/00 ..... 25, 27
206/00033/00 37
206/00035/00 ..... 101, 103
206/00042/00 ..... 29, 31
206/00052/00 ..... 25, 27
206/00054/00 ..... 29, 31, 33, 35
206/00066/00 ..... 25, 27
206/00079/00 ..... 9, 11, 13
206/00088/00 ..... 77, 79, 81
206/00093/00 ..... 15, 17, 19
206/00099/00 ..... 11, 37, 67, 69, 71, 73, 75, 77, 79, 81, 89, 91, 93
206/00110/00 ..... 29, 33, 35
206/00119/00 ..... 29, 33, 35
208/00134/00 31

Bracket Support
111/00155/10 101

B1254320125

C

Central Control Board
209/00438/50 85

Chassis
212/00111/50 9
212/00112/50 13
212/00120/00 11

Circuit Board Cover
229/00262/00 ..... 57, 59, 61
229/00289/00 ..... 43, 45, 47, 49, 51, 53, 55

Coin Box
254/00077/00 ..... 63, 65

Coin Drop
B11211209 63
B12311201 63
B12311202 63
B12311203 63
B12311204 63
B12311205 63
B12311206 63
B12311207 63
B12311208 63
B12311210 63
B12311211 63
B12311212 63
B12311214 63
B12311215 63
B12311216 63
B12311218 63
B12311219 63
B12311220 63

N/A items do not appear in index.

© Copyright, Alliance Laundry Systems LLC – DO NOT COPY or TRANSMIT

B12311221 63
B12311222 63
B12311224 63
B12311225 63
B12311226 63
B12311234 63
B12311235 63
B12311239 63
B12311241 63
B12311244 63
B12311247 63
B12311248 63
B12311249 63
B12311252 63
B12311301 63
B12311302 63
B12311304 63
B12311401 65
B12323401 63
B12323901 63

Connection Clamp
209/00619/01 89
209/00622/01 89
209/00625/01 89

Contact Switch
209/00099/26 ..... 43, 45, 47, 49, 51, 53, 57, 59, 61

Control Board
209/00547/00 ..... 57, 59

Control Panel
111/00301/00 ..... 53, 59
111/00301/10 57
111/00301/20 61
111/00301/30 43
111/00301/31 49
111/00301/32 51
111/00301/33 45
111/00301/34 47
111/00331/00 ..... 53, 59
111/00331/10 57
111/00331/20 61
111/00331/30 ..... 43, 45, 47, 49, 51, 53, 57, 59, 61
111/00331/31 49
111/00331/32 51
111/00331/33 45
111/00331/34 47

Cooling Fan
209/00287/00 ..... 29, 31, 33, 35, 77, 79, 81

Cordlock
211/00168/00 ..... 29, 31, 33, 35

Counter Ring
219/00004/00 21
232/00008/00 23

D

Data Card Ribbon Assembly
B12538301 ..... 43, 45, 47, 49, 51

Datacard
209/02022/00 ..... 43, 45, 47, 49, 51

Datacard Cover
223/00348/00 ..... 43, 45, 47

Decal
225/00403/00 57

Detergent PC-Board
209/02005/00 87
209/02008/00 87

Diaphragm
209/00316/02 75

Dispenser Assembly
223/00102/60 ..... 95, 97

Dispenser Drain Funnel
223/00196/00 ..... 95, 97, 99

Display PC-Board
209/02002/00 43

Door
118/00125/00 41

Door Glass
B12449801 41

Door Glass Seal
223/00068/00 41

Door Handle
217/00059/00 41
217/00065/00 41

Door Handle Stop
217/00016/00 41

Door Hinge Block
253/00022/00 41

Door Hinge Plate Assembly
111/00003/00 41

Door Hinge Spacer
118/00122/00 41
118/00124/00 41

Door Lock Assembly
217/00052/00A 39
217/00052/01A 39

Door Lock Bracket
217/00052/11 39

Door Lock Microswitch
209/00272/00 39

Door Lock PC-Board
209/02010/00 ..... 43, 45, 47, 49, 51

Door Lock Pin Kit
211/00109/02 ..... 39, 41

Door Lock Spacer
217/00052/03 39

Door Lock Spring
224/00049/00 39

Door Release Wire
217/00052/07 39

Door Solenoid Assembly
B12495102 39

Drain Hose
223/00387/00 37

Drain Pipe
223/00106/00 37

Drain Valve
209/00644/00 37

Drain Valve Coil Cover
209/00643/01 37

Drain Valve Support
212/00120/01 11

Drain Valve to Drain Tube Hose
223/00328/00 37

Drive
F8420321 77
F8420322 77
F8420323 79
F8420324 79
F8420325 81

N/A items do not appear in index.

© Copyright, Alliance Laundry Systems LLC – DO NOT COPY or TRANSMIT

F8420326 81

Drum
B12327301 ..... 23, 27
131/00059/50 27
132/10009/00 ..... 23, 27

Drum Pulley
226/00142/00 ..... 21, 23

Dual Drop Optical Sensor Kit
B12388102 63

E

Electrical Component Bridge
111/10004/20 93
111/10005/00 ..... 91, 93

Electrical Component Mounting Plate
111/10003/40 ..... 89, 91

Electrical Component Plate
111/10004/00 89
111/10004/10 89

Electronic Coin Meter Housing
152/00112/50 65

Emergency Switch Pushbutton
209/00099/20 ..... 43, 45, 47, 49, 51

Eprom
209/00266/01 ..... 53, 55

Exterior Box
223/00102/40 ..... 95, 97
223/00222/01 99

F

Fastening Piece
217/00060/00 ..... 63, 65

Feeding Liquid Soap Dosing Pump
209/00554/51 105

Filter
209/00287/21 ..... 77, 79, 81
227/00177/00 83
227/00179/00 83
227/00180/00 83
227/00183/00 83

Filter Bracket
111/01837/01 83

Frame
212/00119/03 13

Front Panel
111/00293/00 73
111/00332/00 73
131/00002/00 27

Front Plate
111/01000/00 ..... 63, 65

Fuse
209/00372/01 61
209/00439/00 ..... 53, 55, 57, 59
209/00468/00 ..... 85, 87

Fuse Holder
209/00202/00 ..... 85, 87
209/00202/01 ..... 85, 87

G

Gasket
246/00149/00 69

Grease Ring
212/00007/00 19

Grommet
223/00174/00 ..... 77, 79, 81

Ground Terminal
209/00006/01 83
210/10015/00 39

H

Heating Contactor
209/00641/04 ..... 89, 91, 93
209/06148/02 ..... 89, 91, 93

Heating Element
209/00562/20 ..... 101, 103
209/00563/20 ..... 101, 103
209/00564/20 ..... 101, 103
209/00581/10 ..... 101, 103

Heating Element Plug
209/00196/00 101

Hinge
221/00004/00 41

Hose
B12322403 ..... 95, 99
209/00554/98 105

Hose Barb
223/00016/00 37

Hose Clamp
223/00010/00 ..... 37, 75, 95, 97, 99
223/00011/00 ..... 37, 75
223/00013/00 37
223/00014/00 ..... 95, 97
223/00071/00 ..... 37, 95, 97, 99

Hose Connector
209/00554/99 105

Hose Vent
223/00102/07 75

I

ID Chip
209/02020/00 87

Infrared Cable
210/00902/00 ..... 57, 59, 61

Inlet Valve Solenoid
209/00090/01 75

Inlet Valve, 2-Way
209/00316/00 75
209/00419/00 75

Input Block
209/00683/00 65

Insulating Sticker
229/00255/00 ..... 53, 55, 57, 59, 61
229/00268/00 43
229/00291/00 ..... 45, 47

Interlock Coil Spring
224/00043/00 39

N/A items do not appear in index.

© Copyright, Alliance Laundry Systems LLC – DO NOT COPY or TRANSMIT

Interlock Lever
217/00052/04 39
Intermediate Fan Motor Plate
111/00243/00 ..... 29, 31, 33, 35
Inverter
227/00169/00 81
227/00230/00 81
227/00238/00 81
Inverter Box Cover
111/01158/11 ..... 77, 79, 81
Inverter Drive
227/00168/00 ..... 77, 79
227/00229/00 ..... 77, 79
227/00237/00 ..... 77, 79
Inverter Drive Box
111/01149/00 ..... 79, 81
111/01150/00 77
Inverter Kit
F8420221 77
F8420222 77
F8420223 79
F8420224 79
F8420225 81
F8420226 81
Inverter PC-Board
209/02006/00 87

K

Key
212/00026/00 ..... 21, 23
254/00077/02 ..... 63, 65
Keypad
209/00552/01 61
Keypad Sticker
225/00407/00 53
Kickplate
111/00300/00 67
111/00333/00 ..... 69, 71

L

Label
225/00397/00 61
Lever Spring
224/00040/00 39
Light Microswitch
209/00273/00 39
Lip Seal
B12332301 17
Liquid Soap Dispenser Insert
223/00102/08 ..... 95, 97
Liquid Soap Dosing Pump Connection Piece
209/00554/53 105
Liquid Soap Dosing Pump O-Ring
209/00554/52 105
Liquid Soap Manifold
223/00249/00 ..... 77, 79, 81, 95, 97, 99
Lock Shaft
217/00017/03 39
Lubricator
212/00002/00 19

M

Main Board
B12351701 61
Main Switch
209/00526/00 83
209/00529/00 83
209/00672/00 83
Main Switch Cover
111/01834/00 83
Mechanical Coin Meter Housing
152/00112/00 63
Memory Card PC-Board
B12305201 ..... 43, 45, 47, 49, 51
Microprocessor
209/02025/00 87
Motor
B12510601 ..... 29, 31
B12510701 33
B12510901 35
209/00644/11 37
Motor Clamp
212/00121/01 31
Motor Mounting Plate
115/11235/00 29
Motor Plate
115/11305/00 ..... 33, 35
Motor Pulley
226/00145/00 ..... 29, 31
Mounting Plate
223/00374/00 ..... 43, 45, 47, 49, 51
Mushroom Pushbutton
209/00248/20 ..... 43, 49, 51, 53, 57, 59, 61

N

Network Connection Printboard
209/00540/01 85
209/02007/00 87
Noise Filter
B12339401 ..... 77, 79, 81
227/00242/00 83
Nut
204/00002/00 ..... 9, 11, 13, 25, 27
204/00003/00 ..... 25, 27
204/00004/00 ..... 9, 11, 13, 31, 101, 103
204/00005/00 103
204/00006/00 ..... 67, 69, 71
204/00007/00 ..... 67, 75, 77, 79, 81
204/00008/00 ..... 39, 63, 65
204/00009/00 ..... 25, 27, 37, 39, 67, 69, 71
204/00010/00 ..... 15, 17, 19
204/00103/00 41
204/00106/00 ..... 41, 73
204/00107/00 73
204/00110/00 ..... 29, 33, 35
204/00111/00 ..... 25, 27
204/00114/00 ..... 57, 59, 77, 79, 81
204/00115/00 ..... 29, 31, 33, 35
204/00116/00 ..... 43, 45, 47, 49, 51, 53, 55, 61, 63, 65, 87
204/00201/00 ..... 37, 75
206/00101/00 ..... 11, 37, 67, 69, 71

N/A items do not appear in index.

© Copyright, Alliance Laundry Systems LLC – DO NOT COPY or TRANSMIT

208/00002/00 ..... 65, 75
208/00025/00 ..... 67, 69, 71
208/00104/00 73
211/00171/00 ..... 77, 79, 81
211/00182/00 ..... 77, 79, 81

O

Operating Sticker
225/00400/00 61
225/00404/00 59
225/00405/00 59
225/00408/00 53
225/00410/00 55
225/10307/00 ..... 49, 51
225/10308/00 ..... 49, 51
225/10313/00 43
225/10404/00 45
225/10405/00 47
225/10427/00 45
225/10477/00 47

Optic Cable
210/00901/00 ..... 43, 45, 47, 49, 51

Optical Switch
209/00781/00 63

O-Ring
217/00002/00 15
217/00021/00 ..... 29, 31, 33, 35, 41
231/00036/00 19

Outer and Inner Box Kit
223/00222/60 99

Outlet Pipe Plate Assembly
101/00007/00 ..... 67, 69, 71

Overflow Hose
223/00131/00 37

Overload Contactor
209/00619/00 89
209/00620/00 89
209/00621/00 89
209/00622/00 89
209/00623/00 89
209/00624/00 89
209/00625/00 89

P

Parameter Unit Assembly
F8410901 ..... 77, 79, 81
227/00171/00 ..... 77, 79, 81

Parameter Unit Program Cable
227/00171/10 ..... 77, 79, 81

Plexi Frame
225/00316/00 ..... 53, 55, 57, 59
225/00321/00 43
225/00322/00 ..... 49, 51
225/00323/00 ..... 45, 47

Powder Bin Crossbar
111/00156/11 71

Prerssure Switch
209/00027/10 93

Pressure Hose
223/00179/10 ..... 77, 79, 81
223/00333/00 ..... 37, 89, 91, 93

Pressure Switch
209/00007/50 89
209/00027/10 91

Pressure Switch Cap
223/00035/02 ..... 89, 91, 93

Pressure Switch Elbow
223/00210/00 37

Pressure Switch Hose Tee
223/00173/10 ..... 37, 89, 91, 93

Prewash and Mainwash Nozzle
223/00001/04 ..... 37, 75

Printboard
209/00440/70 ..... 53, 55
209/00440/80 ..... 53, 55
209/02001/02 ..... 49, 51
209/02015/02 ..... 45, 47

Printboard Separator
211/00128/00 ..... 43, 45, 47, 49, 51, 87

Printboard Support
111/01838/10 85

Printboard Support Card
111/01893/00 ..... 43, 45, 47

Programming Key Contact Switch
209/00326/20 61

Protection LED
223/00330/00 ..... 49, 51

Pulley
226/00146/00 ..... 33, 35

Pump
209/00554/50 105

Pushbutton
209/00396/00 ..... 63, 65

R

Reinforcement Plate
111/10089/01 73

Relay PC-Board
209/02014/00 87
209/02016/00 87

Retainer Ring
212/00006/00 ..... 15, 17, 19
212/00037/00 ..... 15, 17

Retaining Ring
117/00042/00 ..... 29, 31, 33, 35, 67, 69, 71

Rinse Insert
223/00102/03 ..... 95, 97

Rinsing Box
223/00222/05 99

Rivet
208/00017/00 ..... 83, 85, 87, 89

Roller Bearing
212/00005/00 ..... 19, 23

S

Screw
B12350903 ..... 95, 97, 99
B12500801 41
206/00007/00 ..... 9, 11, 13
206/00049/00 ..... 29, 31, 33, 35
206/00056/00 ..... 21, 23

N/A items do not appear in index.

© Copyright, Alliance Laundry Systems LLC – DO NOT COPY or TRANSMIT

206/00166/00 71
207/00002/00 ..... 29, 31, 33, 35
207/00004/00 23
207/00009/00 39
207/00021/00 ..... 77, 79, 81
207/00032/00 67
207/00101/00 ..... 67, 69, 71
207/00103/00 73
207/00126/00 41
207/00135/00 39
208/00014/00 ..... 65, 67, 69, 71, 75
208/00130/00 ..... 77, 79, 81

Seal Cover
219/00001/00 15

Seal Cover Plate
131/00035/00 19

Seal Holder Assembly
119/00001/01 15
131/00035/01 19

Seal Plate Assembly
B12333701 ..... 15, 17

Shaft Seal
132/00009/00 23
219/00003/00 15
231/00037/00 19

Shrink Fit
223/00245/00 99

Side Panel
111/60038/00 ..... 69, 71
111/60038/50 73
133/60127/00 71
133/60128/00 73
140/60027/00 ..... 67, 71
140/60028/00 73

Single Drop Optical Sensor Kit
B12388101 63

Siphon Break
223/00222/04 99

Siphon Break Dispenser Hose
223/00263/00 ..... 95, 99
223/00264/00 ..... 97, 99

Siphon Break Hose
B12322404 97
223/00268/00 99

Soap Box Assembly Plate
123/00103/06 ..... 95, 97, 99

Soap Box Support Plate
111/00117/00 69

Soap Dispenser
223/00240/00 99

Soap Dispenser Assembly
223/00102/30 ..... 95, 97

Soap Dispenser Back
111/10100/00 67

Soap Dispenser Cover
223/00103/01 73

Soap Dispenser Cover Hinge Rod
223/00103/04 73

Soap Dispenser Crossbar
111/00156/00 69
111/10100/11 71

Soap Dispenser Frame
223/00103/03 73

Soap Dispenser Front
111/10100/10 67

Soap Dispenser Gasket
223/00109/00 ..... 95, 97, 99

Soap Dispenser Rinse Siphon
223/00102/04 ..... 95, 97

Soap Injection PCB with Fuse
209/00218/13 85

Soap Pump Assembly
209/00554/01 105
209/00554/02 105
209/00554/03 105
209/00554/04 105
209/00554/05 105
209/00554/06 105

Soap Spray Nozzle
223/00102/06 ..... 95, 97, 99

Softener Spray Nozzle
223/00102/05 ..... 95, 97
223/00222/03 99

Speed Detector
210/00075/00 ..... 15, 17, 19

Speed Detector Bracket
152/00055/00 ..... 15, 17

Standoff
211/00122/00 ..... 43, 45, 47, 53, 55, 57, 59, 61, 87
211/00145/00 ..... 43, 45, 47
211/00146/00 ..... 85, 87

Steam Bracket
111/00155/00 101

Steam Heat Kit
922P3 101
923P3 103

Steam Hose
217/00034/00 101

Steam Injector
119/00089/00 103
217/00061/00 101

Steam Injector Bracket
113/00028/00 103

Steam Valve
209/00476/00 103
209/00477/00 101

Support Connector
111/10003/10 89

Switch
209/00600/01P 63

Switch Base
209/00099/25 61

Switch Knob
209/00099/29 61

Switch Lever
217/00052/05 39

T

Telem Sticker
209/00520/00 ..... 43, 45, 47, 49, 51, 53, 57, 59, 61

Terminal Block
209/00527/00 83
209/00530/00 83

Thermostat
210/01064/16 ..... 89, 91, 93
210/01304/16 ..... 89, 91, 93

N/A items do not appear in index.

© Copyright, Alliance Laundry Systems LLC – DO NOT COPY or TRANSMIT

Thermostat Seal
225/10004/00 ..... 89, 91, 93

Top Panel
111/00330/00 73
111/01001/00 ..... 63, 65
111/05017/00 73
140/00046/00 73

Transformer
209/00682/00 65

Tub
B12328901 25
B12329001 25
B12331101 25
B12331201 25
B12331301 25
B12331401 27
B12331501 27
B12331601 27
131/00059/00 27
131/00059/60 27

Tub Clamp Ring
238/00011/00 25

Tub Fastening Ring
212/00116/00 ..... 9, 11, 25
212/00117/00 ..... 13, 27

Tub Front
138/00001/00 25

Tub Front Gasket
B12351601 25
223/00242/00 27

Tub Front Panel Clip
217/00008/00 ..... 25, 27

Tub Front Ring Clamp
231/00010/00 27

Tub Mounting Strap
137/00008/00 25

Tub Strap
131/00010/00 27

Tub to Drain Valve Hose
223/00327/00 37

U

U-Piece Assembly
113/00067/00 ..... 15, 17
113/00068/00 19

Upper Front Panel
111/01823/00 55

V

Vent Hose
223/00107/06 95
223/00388/00 97

Vent Tube
223/00226/00 ..... 75, 99
223/00229/00 99

Voltage Discharge Decal
B12355001 ..... 77, 79, 81

W

Washer
B12421401 71
201/00001/00 ..... 15, 17, 19
201/00002/00 ..... 37, 75
201/00004/00 ..... 29, 31, 33, 35
201/00005/00 ..... 9, 11, 13, 25, 27
201/00006/00 ..... 39, 67, 69, 71, 75
201/00007/00 ..... 25, 27, 37, 73, 103
201/00009/00 ..... 25, 27
201/00010/00 ..... 29, 33, 35
201/00011/00 ..... 21, 23
201/00017/00 39
201/00018/00 39
201/00028/00 31
201/00201/00 ..... 15, 17
201/00202/00 19
202/00002/00 ..... 31, 37, 101, 103
202/00003/00 ..... 67, 69, 71
202/00004/00 ..... 75, 83
202/00006/00 67
202/00101/00 ..... 39, 41
202/00104/00 41
202/00111/00 41
202/00124/00 39
203/00001/00 ..... 9, 11, 13, 21, 23, 25, 27
203/00002/00 ..... 25, 27
203/00003/00 ..... 9, 11, 13, 19, 101, 103
203/00004/00 ..... 15, 17, 67, 69, 71, 103
203/00005/00 ..... 67, 69, 71, 73
203/00006/00 ..... 53, 55, 75, 77, 79, 81, 83
203/00007/00 39
203/00015/00 ..... 67, 69, 71
208/00009/00 ..... 67, 69, 71
223/00051/10 61
223/00123/00 ..... 43, 45, 47, 49, 51, 61, 87

Water Hose
F200164 75
F200166 75
223/00044/00 ..... 37, 99
223/00044/01 ..... 75, 95, 97
223/00059/00 ..... 75, 95, 97

Wire Assembly
B12359901 63

N/A items do not appear in index.

© Copyright, Alliance Laundry Systems LLC – DO NOT COPY or TRANSMIT

Notes

© Copyright, Alliance Laundry Systems LLC – DO NOT COPY or TRANSMIT